RHB4

Project Name:	
Type:	



Vandal Resistant

Wet Location

APPLICATION

The LED UFO high bay is suitable for commercial, retails and institutional applications including gyms, factories, and warehouses.

FEATURES:

- Designed to replace 750W and 1000W HID while consumes 250W and 340W.
- Adjustment dial allows the fixture to meet higher ambient temperature requirements (optional).
- Hook or Conduit pendant way for different applications.
- Resistant to shock and vibration.

MOUNTING:

- Hook mount is standard. (supports pendant mounting with 3/4" threaded hub)
- 30" safety cable included as standard.

LENS:

- The standard 120º lens is clear polycarbonate.
- Condenser Lens with heat resistant and maximum output luminous flux.

LED:

- Lumileds 2835.
- Color temperature: 4000 / 5000 (K)
- Color rendering index: >70
- Life span: 50,000 hours

ELECTRICAL:

- Input voltage: 100-277Vac., 50/60Hz
- Operating temperature: -40ºC to 65ºC (-40ºF to 149ºF)
- 0-10V, 0%~100% dimming is standard.
- UL 8750 listed.
- Class 1 circuit.

LISTING:

- UL / cUL listed.
- DLC listed. [1]
- Suitable for dry, damp, wet location.
- 5 years limited warranty.

CONFIGURATIONS (350W, 410W)

Series	Setting	System Watts	Lumen Output	Lumen Efficiency
RHB4-3SL	40%	140W	26600 lm	190 lm/W
	60%	210W	39000 lm	186 lm/W
	80%	280W	51000 lm	182 lm/W
	100%	350W	62000 lm	177 lm/W
RHB4-3SH	40%	164W	31000 lm	189 lm/W
	60%	246W	45500 lm	185 lm/W
	80%	328W	59000 lm	180 lm/W
	100%	410W	72000 lm	176 lm/W

BI-LEVEL PIR SENSOR SPECIFICATIONS

Detection angle	360º
Detection zone	Max. 60' diameter from 40' height
High mode	0-10V/ default 10V
Low mode	Off / 0-9.8V / default 1V
Operating temperature	104ºF ~ 158ºF (-40ºC ~ 70ºC)
Operating humidity	20-90%
Rating	IP66
Voltage	120/277VAC, 50/60Hz

UTOPIA LIGHTING reserves the right to change specifications, drawings, dimensions without prior notice. Visit our website for the latest product information.

RHB4

ORDERING INFORMATION

EXAMPLE: *RHB4-340L-50K-UNV*

MODEL	LED		COLOR TEMP.		VOLTAGE		LENS	
RHB4	**3SL** **3SH**	140/210/280/350W LED (adjustable) 164/246/328/410W LED (adjustable)	**-2T**	4000/5000K Field Selectable	**UNV** **HV**	120-277V 347/480V	**(Blank)**	Clear 120°

FINISH		OPTIONS		LIGHTING CONTROL SYSTEM	
BZ	Dark Bronze RAL 8019 (Std.)	**MSANT12VPH01**	Plug-and-Play PIR Occupancy Sensor [2]		<Bluetooth>
GR	Gray RAL#7036	**SCKxx**	Safety Cable Kit (xx=50", 96", 120", 150", 192", 240")	**PPA102S**	Bluetooth Powerpack (Consult factory for installation location)
WH	White RAL#9003				
BK	Black RAL#9011			**CASAMBI**	Contact factory for CASAMBI READY options

* Available custom color (RAL), Please provide us with the RAL number.
* Non-standard finish with extra charge.

NOTES:
1. DesignLights Consortium® (DLC) qualified product. Not all versions of this product may be DLC qualified.
   Please check the DLC Qualified Products List at www.designlights.org/QPL to confirm which versions are qualified.
2. Available with 3SL and 3SH only.

DIMENSIONS

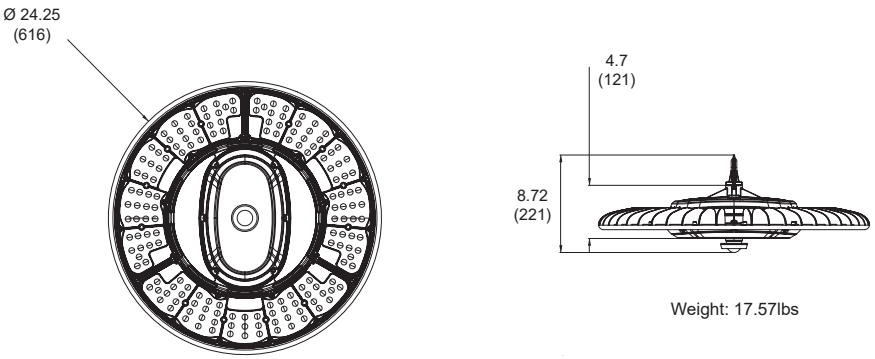

Weight: 17.57lbs

All dimensions are inches (millimeters).

MOUNTING DETAILS

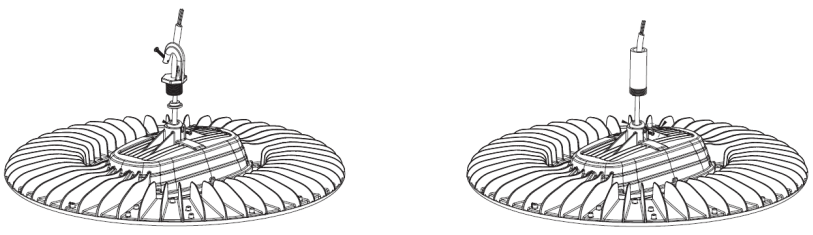

Hook (standard)

3/4" pipe stem (provided by others)

UTOPIA LIGHTING reserves the right to change specifications, drawings, dimensions without prior notice. Visit our website for the latest product information.

RHB4

**** Applies to RHB4-3SL and RHB4-3SH only.**

WATTAGE SELECTABLE

This fixture has the function of adjusting the lumens output on-site.

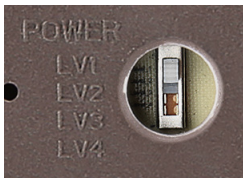





Plug-and-Play Sensor (optional)

Sensor allows for security and energy saving.

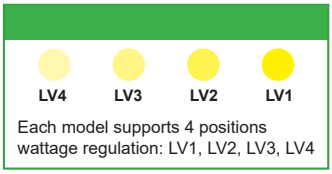

Each model supports 4 positions wattage regulation: LV1, LV2, LV3, LV4





With Sensor Port

UTOPIA LIGHTING reserves the right to change specifications, drawings, dimensions without prior notice. Visit our website for the latest product information.