LRL-2G

Project Name:	
Type:	



CASAMBI

APPLICATION

LRL provides uncompromising optical performance and outstanding versatility for a wide variety of area and roadway applications. Our customer focused features include single latch tool-less entry, industry leading surge protection options and superior lumen maintenance and performance, all in an economical design. It is ideal for illuminating walkways, parking lots and roadways.

FEATURES:

- Heavy-duty cast aluminum housing and removable door 3G vibration rated to ensure strength of construction and longevity in application.
- Housing is completely sealed against moisture and environmental contaminants.
- EPA rating: 0.4567

LED:

- Available in IES Type III distributions.
- Color Temperature: 4000K
- Color Rendering Index: >70
- Scalable Lumen Packages from 9,900 to 14,200 Lumens.
- Optics is precisely designed to shape the distribution, maximizing efficiency and application spacing.
- Life span: ≥ 50,000 hours.

ELECTRICAL:

- Standard drivers feature electronic universal voltage 120-277V, 347V-480V operation.
- Standard 1-10V dimming and 10kA(@120-277V) / 20KA(@347-480V) common and differential- mode surge protection available.
- Greater than 0.9 power factor, less than 20% harmonic distortion, and is suitable for operation in -40°C to 40°C (-40°F to 104°F) ambient environments.
- LED drivers mount to die-cast aluminum back housing for optimal heat sinking, operation efficacy, and prolonged life.

LISTING:

- DLC premium listed. [1]
- UL cUL wet location listed.
- IES LM-80 results and TM-21.
- 5 years limited warranty.
- ARRA compliant. (optional)

CONFIGURATIONS

Series	Input Wattage	Voltage	Lumen Output (4000K)	Lumen Efficiency	EPA
LRL-2G	70W	120-277V	9900 lm	141 lm/W	0.4567
		347-480V	9400 lm	134 lm/W	
	105W	120-277V	14600 lm	139 lm/W	
		347-480V	14200 lm	135 lm/W	

: Lumen information based on T3 distribution.

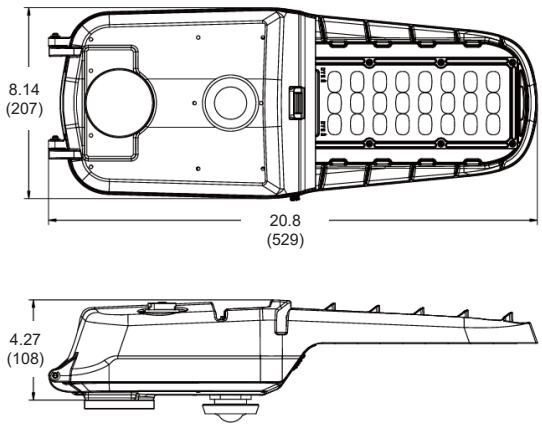

* for use with a 1-5/8"(40mm) or 2-3/8 " (50mm) diameter arm.

UTOPIA LIGHTING reserves the right to change specifications, drawings, dimensions without prior notice. Visit our website for the latest product information.

LRL-2G

ORDERING INFORMATION

EXAMPLE: *LRL-2G-105LED-40K-T3-UNV*

MODEL	LED		COLOR TEMP.		DISTRIBUTION		VOLTAGE		FINISH	
LRL-2G	**70LED** **105LED**	70W LED 100W LED	**-30K** **-40K** **-50K**	3000K 4000K (Std.) 5000K	**T3**	Type III (Std.)	**UNV** **HV**	120-277V (Std.) 347-480V	**(Blank)** ***BK** ***WH**	Silver Gray RAL #7045 (Std.) Black White

* Non-standard finish with extra charge.

DIMMING		OPTIONS	
(Blank)	1-10V dimming	**TLPC3**	3-Pin Receptacle and Twist Lock Photocell Installed 120V-277V (Std.)
		MS	Motion Sensor
		ARRA	Assembled in USA for Buy American act
		CASAMBI	Contact factory for CASAMBI READY options

NOTES:
1. DesignLights Consortium® (DLC) qualified product. Not all versions of this product may be DLC qualified.
   Please check the DLC Qualified Products List at www.designlights.org/QPL to confirm which versions are qualified.

Horizontal angle can be adjusted in 2.5°steps, ±5°

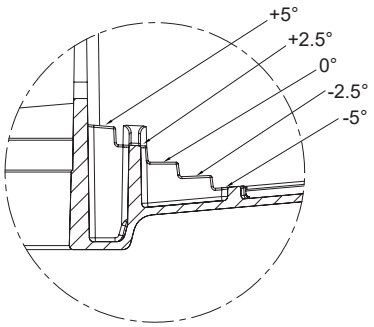

UTOPIA LIGHTING reserves the right to change specifications, drawings, dimensions without prior notice. Visit our website for the latest product information.