CUBE4-WET **CEILING SURFACE MOUNT** INSTALLATION INSTRUCTIONS

BEFORE YOU BEGIN

Read and follow all safety instructions

WARNING

RISK OF FIRE, EXPLOSION AND ELECTRIC SHOCK







- This product should be installed, inspected, and maintained by a qualified electrician only, in accordance with the NEC (National Electric Code) and all local codes.
- Turn off electrical power before inspection, installation or removal.
- Use only UL (or other NTRL) approved wire for input/output connections.
- Make sure LEDs and drivers are cool to touch when performing maintenance.
  Make sure the supply voltage is the same as the rated voltage of the luminaire.
- Do not install in a hazardous atmosphere, except where the ambient temperature does not exceed the rated operating temperature of the fixture.
- Keep tightly closed when in operation

Prepare Electrical Wiring

Electrical Requirements

Must check if the local voltage range is correspond with the working voltage of the fixture. Use min. 75ºC supply.

Grounding Instructions

The grounding and bonding of the overall system shall be done in accordance with NEC Article 600 and local codes.

Follow all applicable safety procedures and use Personal Protective Equipment such as hardhats, safety glasses, reflective vest, electrical safety gloves, fall protection equipment and safety toe boots during the installation, operation, and maintenance of the luminare.

Utopia
866-471-7711
utopialighting.com
support@utopialighting.com

Contractor is responsible for adequately reinforcing ceilings to support luminaire weight.
Utopia Lighting accepts no responsibility for inadequately reinforced ceilings.
The information contained in this drawing is the sole property of Utopia Lighting.
Any reproduction in part or whole is prohibited and warranty is voided.

WARNING: RISK OF FIRE AND ELECTRICAL SHOCK. FIXTURE MUST BE INSTALLED BY A QUALIFIED ELECTRICIAN ONLY IN ACCORDANCE WITH NATIONAL, LOCAL BUILDING AND ELECTRICAL CODES. DISCONNECT POWER AT ELECTRICAL PANEL BEFORE SERVICING.

CUBE4-WET CEILING SURFACE MOUNT INSTALLATION INSTRUCTIONS

INDIVIDUAL INSTALLATION

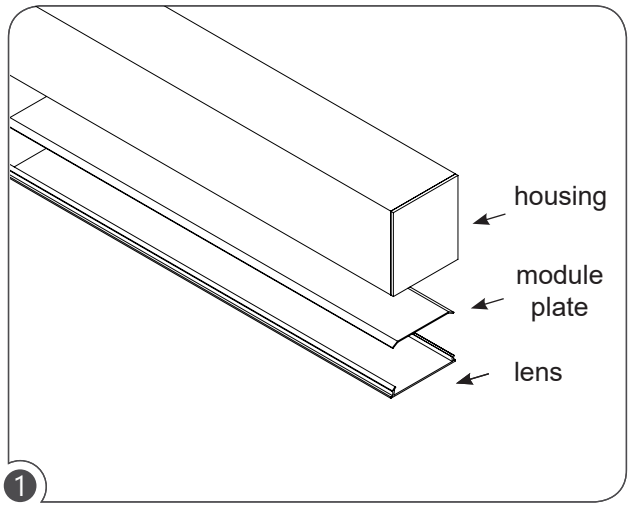

1

Remove module plate and lens from housing.

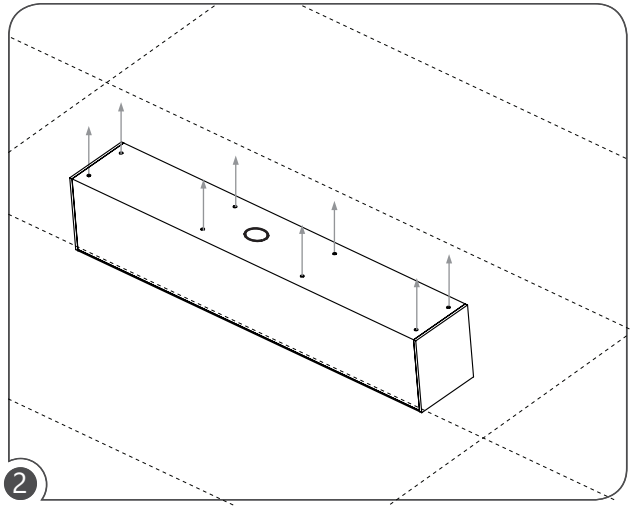

2

Align a fixture to ceiling to mark holes and locate J-box (by others).

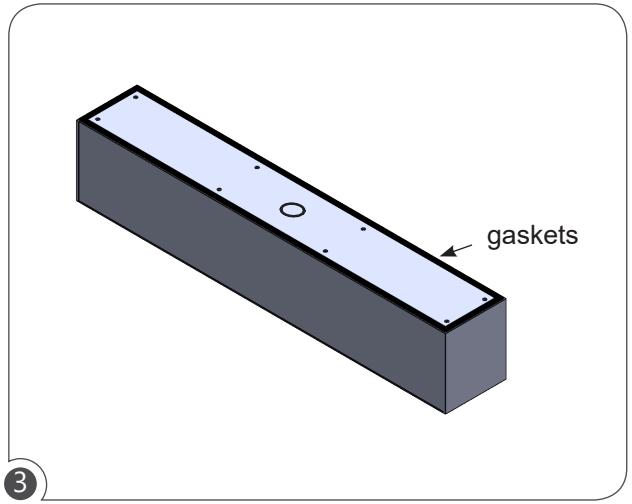

3

Check to ensure pre-installed gaskets on top of the housing are intact on the housing from transit.

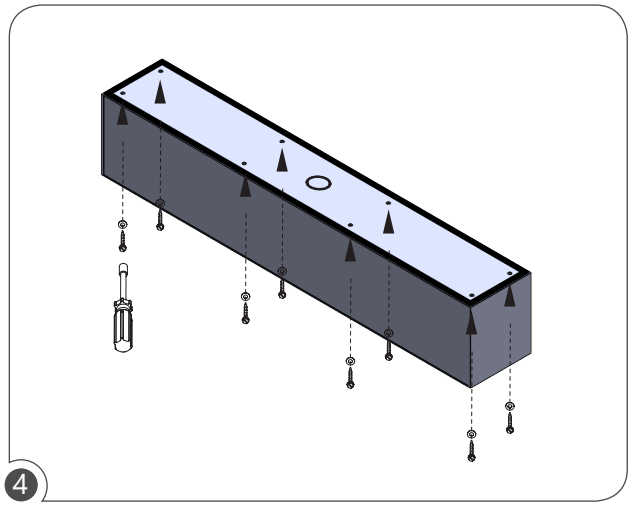

4

Install a fixture to ceiling (necessary hardware by others).

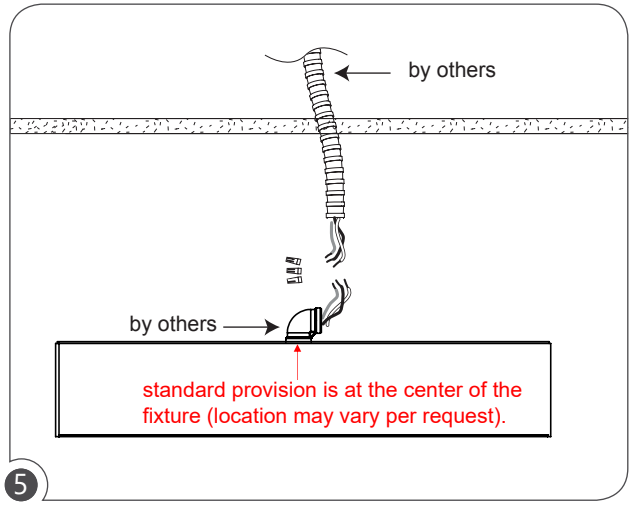

5

Power-feed wiring connection through a pre-holed access located at the top of the fixture, ready for 1/2" water tight conduit fitting (by others).

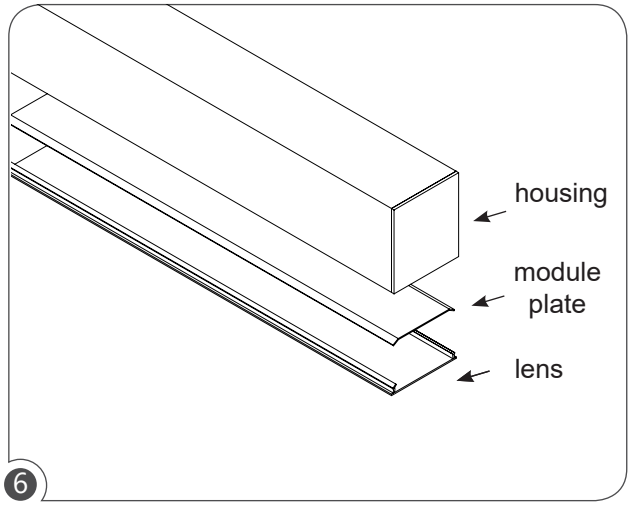

6

Re-install the module plate and lens to complete the installation.

Utopia
866-471-7711
utopialighting.com
support@utopialighting.com

Contractor is responsible for adequately reinforcing ceilings to support luminaire weight. Utopia Lighting accepts no responsibility for inadequately reinforced ceilings. The information contained in this drawing is the sole property of Utopia Lighting. Any reproduction in part or whole is prohibited and warranty voided.

WARNING: RISK OF FIRE AND ELECTRICAL SHOCK. FIXTURE MUST BE INSTALLED BY A QUALIFIED ELECTRICIAN ONLY IN ACCORDANCE WITH NATIONAL, LOCAL BUILDING AND ELECTRICAL CODES. DISCONNECT POWER AT ELECTRICAL PANEL BEFORE SERVICING.

CUBE4-WET **CEILING SURFACE MOUNT** INSTALLATION INSTRUCTIONS

CONTINUOUS RUN INSTALLATION

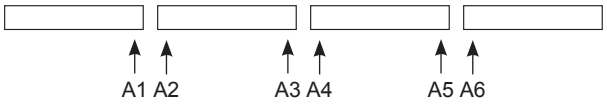

Align continuous row fixtures in numerical order under the same alphabet family.

provided (per joint):

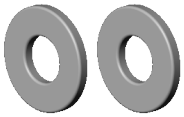

Washer (2pcs)

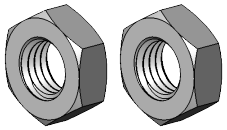

Hexagon locknuts (2pcs)



Long bolt (1pc)

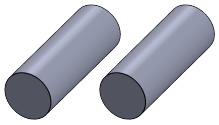

Stopper (2pcs)

866-471-7711
utopialighting.com
support@utopialighting.com

Contractor is responsible for adequately reinforcing ceilings to support luminaire weight. Utopia Lighting accepts no responsibility for inadequately reinforced ceilings. The information contained in this drawing is the sole property of Utopia Lighting. Any reproduction in part or whole is prohibited and warranty voided.

WARNING: RISK OF FIRE AND ELECTRICAL SHOCK. FIXTURE MUST BE INSTALLED BY A QUALIFIED ELECTRICIAN ONLY IN ACCORDANCE WITH NATIONAL, LOCAL BUILDING AND ELECTRICAL CODES. DISCONNECT POWER AT ELECTRICAL PANEL BEFORE SERVICING.

CUBE4-WET **CEILING SURFACE MOUNT** INSTALLATION INSTRUCTIONS

CONTINUOUS RUN INSTALLATION

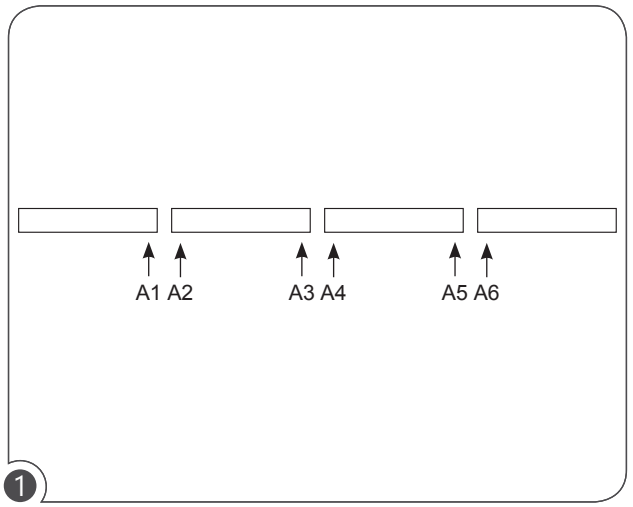

1

Align continuous row fixtures in numerical order under the same alphabet family.

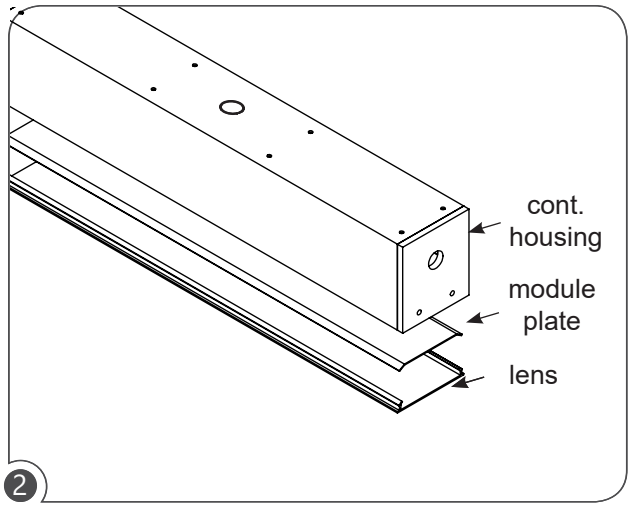

2

Remove module plate and lens from housing.

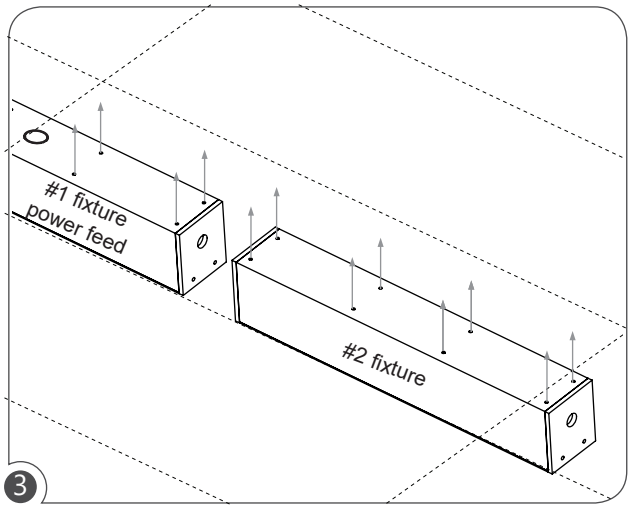

3

Align all continuous fixtures to ceiling to mark holes and locate J-box (by others).

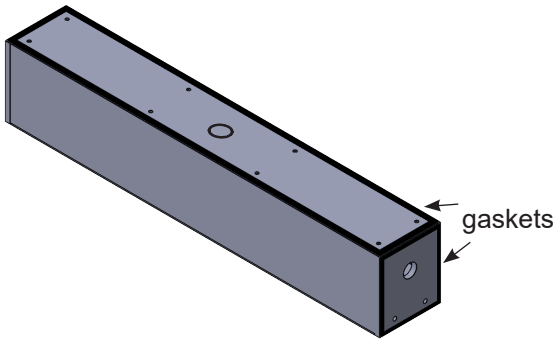

4

Check to ensure pre-installed gaskets - top and side - are intact on the housing from transit.

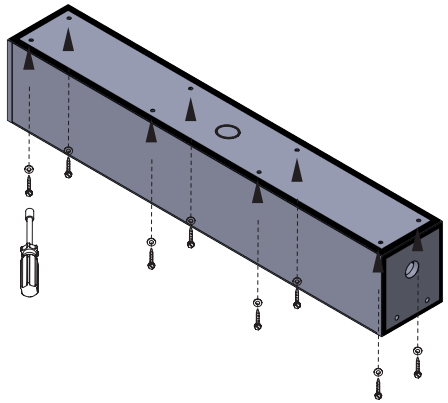

5

Install the first fixture on the ceiling. (necessary hardware by others).

Utopia
866-471-7711
utopialighting.com
support@utopialighting.com

Contractor is responsible for adequately reinforcing ceilings to support luminaire weight. Utopia Lighting accepts no responsibility for inadequately reinforced ceilings. The information contained in this drawing is the sole property of Utopia Lighting. Any reproduction in part or whole is prohibited and warranty voided.

WARNING: RISK OF FIRE AND ELECTRICAL SHOCK. FIXTURE MUST BE INSTALLED BY A QUALIFIED ELECTRICIAN ONLY IN ACCORDANCE WITH NATIONAL, LOCAL BUILDING AND ELECTRICAL CODES. DISCONNECT POWER AT ELECTRICAL PANEL BEFORE SERVICING.

CUBE4-WET **CEILING SURFACE MOUNT** INSTALLATION INSTRUCTIONS

CONTINUOUS RUN INSTALLATION

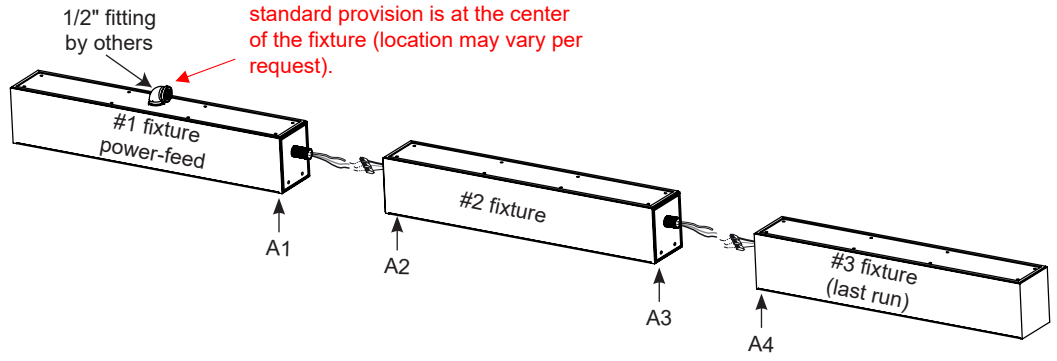

* 1pc long bolt & 2pcs waterproof washer & 2 locknuts provided.

6

After first power-feed fixture has been installed on the ceiling, repeat for each subsequent fixture.
Make continuous run wiring connections through the long bolt.

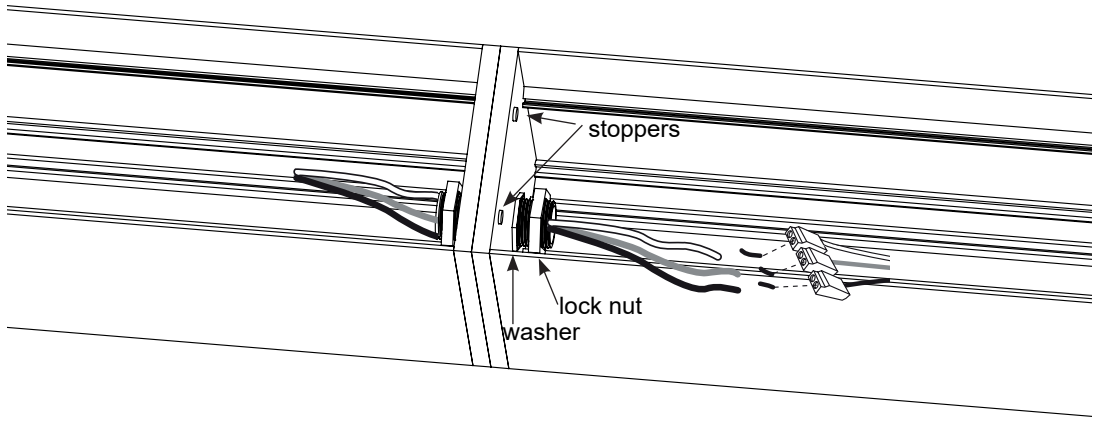

7

Tighten (2) washers and (2) lock nuts from each side, then insert (2) stoppers.
Stoppers must be flushed to the end cap.

Utopia
866-471-7711
utopialighting.com
support@utopialighting.com

Contractor is responsible for adequately reinforcing ceilings to support luminaire weight. Utopia Lighting accepts no responsibility for inadequately reinforced ceilings. The information contained in this drawing is the sole property of Utopia Lighting. Any reproduction in part or whole is prohibited and warranty voided.

WARNING: RISK OF FIRE AND ELECTRICAL SHOCK. FIXTURE MUST BE INSTALLED BY A QUALIFIED ELECTRICIAN ONLY IN ACCORDANCE WITH NATIONAL, LOCAL BUILDING AND ELECTRICAL CODES. DISCONNECT POWER AT ELECTRICAL PANEL BEFORE SERVICING.

CUBE4-WET **CEILING SURFACE MOUNT** INSTALLATION INSTRUCTIONS

CONTINUOUS RUN INSTALLATION

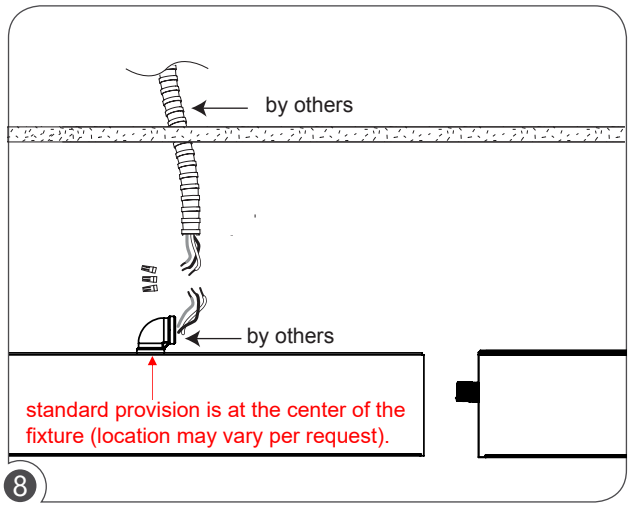

8

Power-feed wiring connection through a pre-holed access located at the top of the fixture, ready for 1/2" water tight conduit fitting (by others).

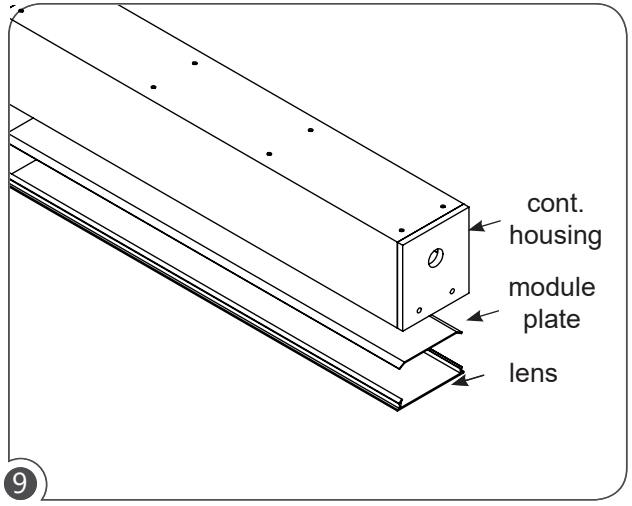

9

Re-install the module plate and lens to complete the installation.

Utopia
866-471-7711
utopialighting.com
support@utopialighting.com

Contractor is responsible for adequately reinforcing ceilings to support luminaire weight. Utopia Lighting accepts no responsibility for inadequately reinforced ceilings. The information contained in this drawing is the sole property of Utopia Lighting. Any reproduction in part or whole is prohibited and warranty voided.

WARNING: RISK OF FIRE AND ELECTRICAL SHOCK. FIXTURE MUST BE INSTALLED BY A QUALIFIED ELECTRICIAN ONLY IN ACCORDANCE WITH NATIONAL, LOCAL BUILDING AND ELECTRICAL CODES. DISCONNECT POWER AT ELECTRICAL PANEL BEFORE SERVICING.