CUBE4-WET **PENDANT MOUNT** INSTALLATION INSTRUCTIONS

BEFORE YOU BEGIN

Read and follow all safety instructions

WARNING

RISK OF FIRE, EXPLOSION AND ELECTRIC SHOCK







- This product should be installed, inspected, and maintained by a qualified electrician only, in accordance with the NEC (National Electric Code) and all local codes.
- Turn off electrical power before inspection, installation or removal.
- Use only UL (or other NTRL) approved wire for input/output connections.
- Make sure LEDs and drivers are cool to touch when performing maintenance.
  Make sure the supply voltage is the same as the rated voltage of the luminaire.
- Do not install in a hazardous atmosphere, except where the ambient temperature does not exceed the rated operating temperature of the fixture.
- Keep tightly closed when in operation

Prepare Electrical Wiring

Electrical Requirements

Must check if the local voltage range is correspond with the working voltage of the ÿxture. Use min. 75ºC supply.

Grounding Instructions

The grounding and bonding of the overall system shall be done in accordance with NEC Article 600 and local codes.

Follow all applicable safety procedures and use Personal Protective Equipment such as hardhats, safety glasses, reflective vest, electrical safety gloves, fall protection equipment and safety toe boots during the installation, operation, and maintenance of the luminare.

Utopia
866-471-7711
utopialighting.com
support@utopialighting.com

Contractor is responsible for adequately reinforcing ceilings to support luminaire weight.
Utopia Lighting accepts no responsibility for inadequately reinforced ceilings.
The information contained in this drawing is the sole property of Utopia Lighting.
Any reproduction in part or whole is prohibited and warranty is voided.

WARNING: RISK OF FIRE AND ELECTRICAL SHOCK. FIXTURE MUST BE INSTALLED BY A QUALIFIED ELECTRICIAN ONLY IN ACCORDANCE WITH NATIONAL, LOCAL BUILDING AND ELECTRICAL CODES. DISCONNECT POWER AT ELECTRICAL PANEL BEFORE SERVICING.

CUBE4-WET **PENDANT MOUNT** INSTALLATION INSTRUCTIONS

INDIVIDUAL INSTALLATION

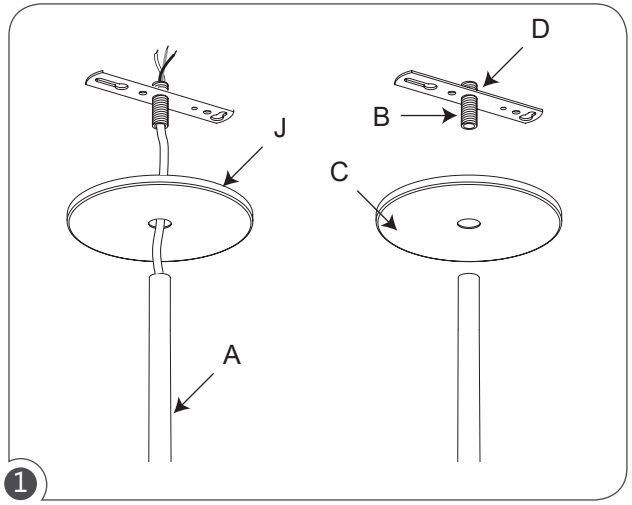

1

Run power cable through stem(A). Slide the trim ring(J) and then the canopy(C) onto the stem and leave loose. Screw the j-box bracket(D) with the threaded stud(B) onto the stem.

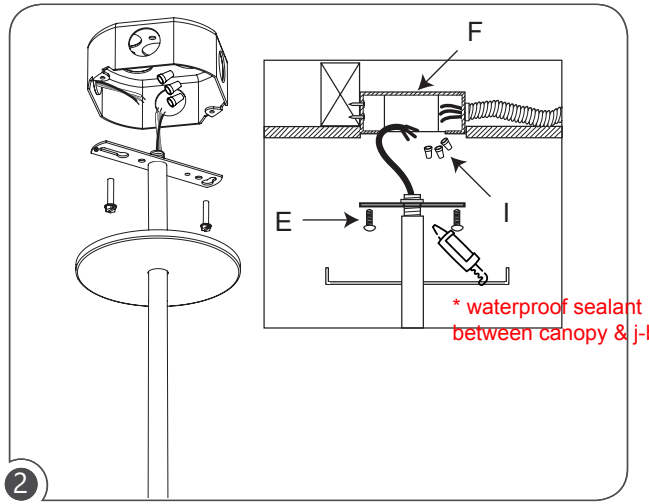

2

Align the power side of fixture to the j-box(F) and rise to ceiling and secure with screws(E) the j-box bracket to the junction box. Make electrical connection with wire nuts(I). Slide the canopy and secure in place with the trim ring.

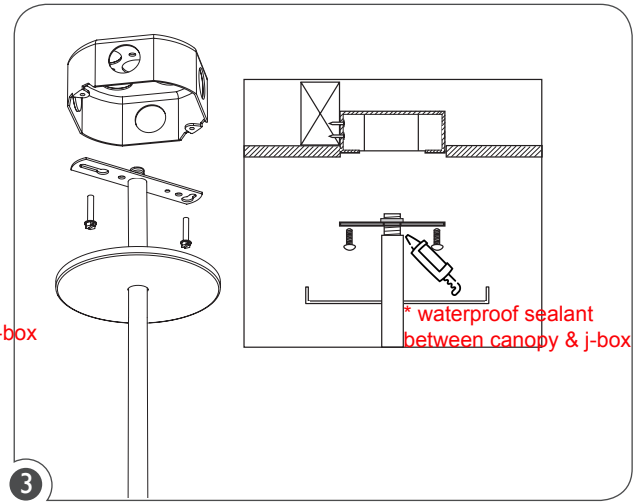

3

Align the non power side, raise the fixture to the ceiling and secure with screws the j-box bracket to the junction box. Slide the canopy and secure in place with the trim ring.

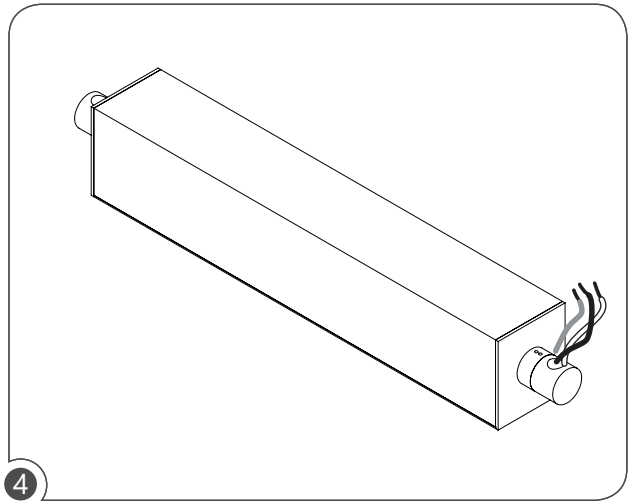

4

One end will have exposed wires, to be the powerfeed side.

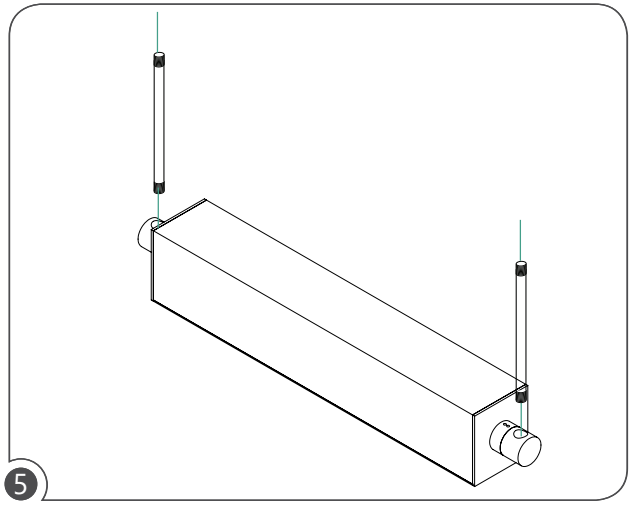

5

Insert 1/2" NPT stem (by others or purchased with -STxx option).

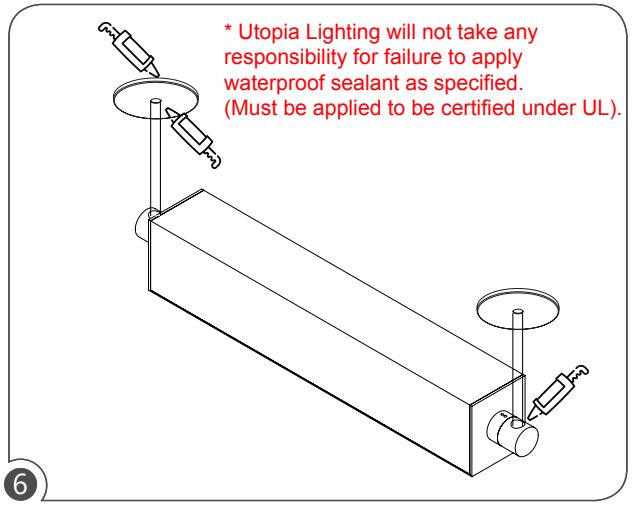

6

Waterproof sealant must be applied between canopy & j-box, canopy & stem, and stem & end cap.

Utopia

866-471-7711
utopialighting.com
support@utopialighting.com

Contractor is responsible for adequately reinforcing ceilings to support luminaire weight. Utopia Lighting accepts no responsibility for inadequately reinforced ceilings. The information contained in this drawing is the sole property of Utopia Lighting. Any reproduction in part or whole is prohibited and warranty voided.

WARNING: RISK OF FIRE AND ELECTRICAL SHOCK. FIXTURE MUST BE INSTALLED BY A QUALIFIED ELECTRICIAN ONLY IN ACCORDANCE WITH NATIONAL, LOCAL BUILDING AND ELECTRICAL CODES. DISCONNECT POWER AT ELECTRICAL PANEL BEFORE SERVICING.

CUBE4-WET **PENDANT MOUNT** INSTALLATION INSTRUCTIONS

FIELD ADJUSTABLE FEATURE

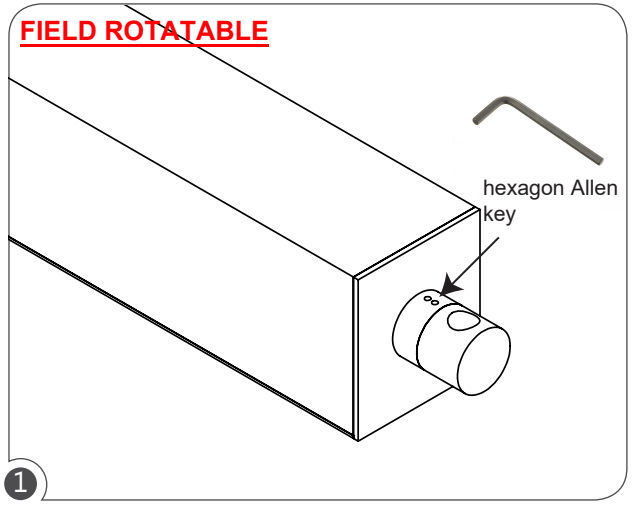

Use hexagon Allen key to loose and rotate the luminaire at desired angle, and lock to fix.

866-471-7711
utopialighting.com
support@utopialighting.com

Contractor is responsible for adequately reinforcing ceilings to support luminaire weight. Utopia Lighting accepts no responsibility for inadequately reinforced ceilings. The information contained in this drawing is the sole property of Utopia Lighting. Any reproduction in part or whole is prohibited and warranty voided.

WARNING: RISK OF FIRE AND ELECTRICAL SHOCK. FIXTURE MUST BE INSTALLED BY A QUALIFIED ELECTRICIAN ONLY IN ACCORDANCE WITH NATIONAL, LOCAL BUILDING AND ELECTRICAL CODES. DISCONNECT POWER AT ELECTRICAL PANEL BEFORE SERVICING.

CUBE4-WET **PENDANT MOUNT** INSTALLATION INSTRUCTIONS

CONTINUOUS RUN INSTALLATION

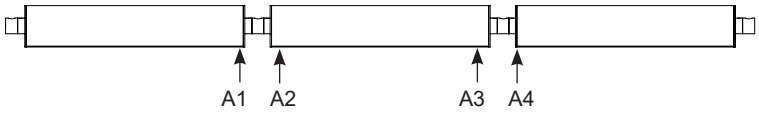

Continuous Row

Align continuous row fixtures in numerical order under the same alphabet family.

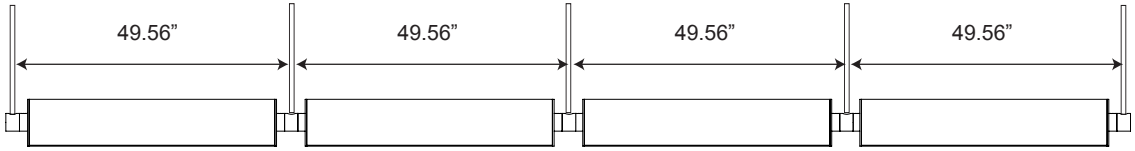

provided (per joint):

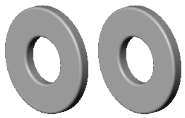

Washer (2pcs)

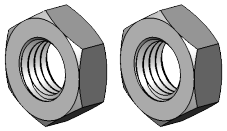

Hexagon
locknuts (2pcs)

Utopia
866-471-7711
utopialighting.com
support@utopialighting.com

Contractor is responsible for adequately reinforcing ceilings to support luminaire weight. Utopia Lighting accepts no responsibility for inadequately reinforced ceilings. The information contained in this drawing is the sole property of Utopia Lighting. Any reproduction in part or whole is prohibited and warranty voided.

WARNING: RISK OF FIRE AND ELECTRICAL SHOCK. FIXTURE MUST BE INSTALLED BY A QUALIFIED ELECTRICIAN ONLY IN ACCORDANCE WITH NATIONAL, LOCAL BUILDING AND ELECTRICAL CODES. DISCONNECT POWER AT ELECTRICAL PANEL BEFORE SERVICING.