LPT2-2G

Post Top, Surface Ceiling, Wall & Pole Mount

Project Name:	
Type:	



APPLICATION

The LPT2-2G decorative LED luminaire features a sleek, sophisticated structure that seamlessly combines outdoor lighting functionality with architectural aesthetics. Its comfortable, low-glare optical design makes it an ideal choice for parking lots, drive lanes, entrances, building perimeters, pathways and landscaping projects.

FEATURES:

- Wattage-selectable and CCT-selectable via onboard field controller — no factory pre-selection required.
- Photocell and motion sensor control options available.
- Sensor version supports Bluetooth-based networking control.
- External half glare shield available — reduces backlight while retaining up to 90% system efficiency.
- Optional emergency battery backup (8W/90min).

MOUNTING:

- Post top (PT): fits pole tenon up to 3.28" (83.5mm) dia.
- Surface ceiling (SM): direct ceiling or junction-box mounting.
- Wall (WM): direct wall mounting.
- Pole (PMR/PMS): arm for 3", 4" and 5" round or square poles.

OPTICS:

- High-density LED array with dedicated optics for precise beam control and uniform illumination.
- Type II, III, IV and V distributions available (Type V standard).

LED:

- Color Temperature: 3000K/4000K/5000K, field-selectable (5000K default setting).
- CRI > 70.

ELECTRICAL:

- Input Voltage: 120-277/347VAC.
- Power Factor > 0.92.
- 0-10V dimmable driver; dimming wires are factory-configured for wattage/CCT selection and are not available for external dimmer control.
- Surge protection: L/N-PE 10kV, L-N 10kV.
- Ambient Temperature: -22°F (-30°C) to 113°F (45°C).

LISTING:

- cULus Listed for wet locations.
- DLC 6.0 Premium.
- 5-year limited warranty.

HOUSING:

- Rugged die-cast aluminum housing with a durable powder-coated finish.

CONFIGURATIONS

Model	Wattage	Lumens @5000K	Efficacy	CCT	Input Voltage
LPT2-2G 3SL	63W	9,135 lm	145.0 lm/W	3000/4000/5000K	120-277/347VAC
	53W	7,685 lm	145.0 lm/W		
	33W	4,785 lm	145.0 lm/W		
LPT2-2G 3SH	125W	18,125 lm	145.0 lm/W	3000/4000/5000K	120-277/347VAC
	105W	15,225 lm	145.0 lm/W		
	76W	11,020 lm	145.0 lm/W		

Lumen output and efficacy are rated at 5000K. Lumens at the maximum wattage step (63W, 125W) are as tested; output at the lower wattage steps is calculated from rated system efficacy. See Ordering Information for wattage-tier and distribution-type codes.

UTOPIA LIGHTING reserves the right to change specifications, drawings, dimensions without prior notice. Visit our website for the latest product information.

LED HIGH LUMEN POST TOP LIGHT

LPT2-2G

Post Top, Surface Ceiling, Wall & Pole Mount

ORDERING INFORMATION

EXAMPLE: LPT2-2G3SH3TUNVT5PTBZPC3MSEM8

MODEL	WATTAGE [1]		CCT [1]		VOLTAGE		DIST. TYPE [2]	
LPT2-2G	3SH	125/105/76W, selectable	3T	3000/4000/5000K, selectable	UNV	120-277/347VAC (Std.)	T5	Type 5 (Std.)
	3SL	63/53/33W, selectable					T2	Type 2
							T3	Type 3
							T4	Type 4

MOUNTING		FINISH [4]		PHOTOCELL		SENSOR [3]		OPTIONS	
PT	Post Top	BZ	Dark Bronze (Std.)	(Blank)	Without Photocell (Std.)	(Blank)	Without Sensor (Std.)	(Blank)	None (Std.)
SM	Surface Ceiling	BK	Black	PC3	With Photocell	MS	With Sensor	EM8	Emergency Battery (8W/ 90min)
WM	Wall	WH	White			BMS	Bluetooth Control Motion Sensor	GS	External Half Glare Shield
PMR	Round Pole								
PMS	Square Pole								

NOTES:
1. Wattage and color temperature are both field-selectable via the onboard controller — no factory pre-selection required at order time.
2. Type 5 is the standard distribution; Type 2, 3 and 4 optics are field-installable (separate lens).
3. In emergency mode, 3000K is disabled — only 4000K/5000K are available.
4. Available custom color (RAL) — please provide us with the RAL number. Non-standard finish with extra charge.

ACCESSORIES



Photocell
Dusk-to-dawn photocell.



Motion Sensor
Screw-in PIR sensor, max. mounting height 8m; networking wireless version supports Bluetooth control.

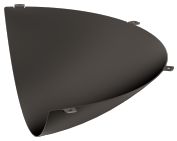

External Half Glare Shield
Reduces backlight without disrupting the light engine; retains up to 90% system efficiency.



Post Top Mount Bracket (Standard)
Die-cast aluminum, dark bronze. Included standard with PT. See Dimensions below.

DIMENSIONS

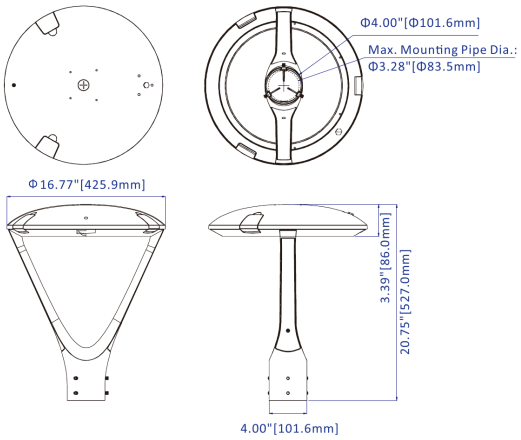

Post Top Mount (PT)
Fixture: Ø16.77" (425.9mm) dia. x 20.75" (527.0mm) H overall; head 3.39" (86.0mm) H. Max. mounting pipe dia. 3.28" (83.5mm).



Surface Ceiling Mount (SM)
Fixture: Ø16.77" (425.9mm) dia. x 4.17" (106.0mm) H overall.



Wall Mount (WM)
Head 3.39" (86.0mm) H; overall mounting height 5.08" (129.0mm). Bracket: 20.76" (527.3mm) overall length, 18.34" (465.9mm) fixture-to-wall face.



Pole Mount (PMR/PMS)
Head 3.39" (86.0mm) H; overall mounting height 5.67" (144.0mm). Arm: 23.92" (607.5mm) overall length, 18.34" (465.9mm) fixture-to-pole face.

UTOPIA LIGHTING reserves the right to change specifications, drawings, dimensions without prior notice. Visit our website for the latest product information.