Revised: 10.15.2026

MFL6 LED

Project Name:	
Type:	

LISTED

WET LOCATION

CASAMBI

APPLICATION

The MFL6 luminaire is a high performance LED lighting solution designed with optical versatility and a slim, low profile design. Its rugged cast aluminum housing minimizes wind load requirements and features an integral, watertight power source compartment and high performance aluminum heat sinks. Suitable for parking lots, walkways, car dealerships, roadways, and etc.

FEATURES:

- Housing and electrical compartment are made from die cast aluminum, pre-treated and powder-coated to meet the most rugged industry standards.
- Vented housing isolates LED modules from driver, maximizing product life and performance.
- Door frame is sealed to housing with a continuous extruded silicone gasket.
- Field selectable wattages and lumens
- Operating temperature: -40ºF~104ºF (-40ºC~40ºC)

MOUNTING:

- Knuckle mount (1/2" NPS).
- Trunnion mount.
- Slip Fitter.
- Yoke mount.

LED:

- Lumileds LED
- Color Temperature: 3000/4000/5000K
- Lumen efficiency: up to 143 lm/W
- Color rendering index> >70
- Life span: 100,000 hours

OPTIC:

- NEMA Type: 7H x 6V
- High performance acrylic optic securely attached to internal heak sink for maximum thermal dissipation.

ELECTRICAL:

- 0-10V dimming as standard
- Input Voltage: 120-277VAC, 50-60Hz
- Optional: 347-480V
- Power Factor: >90%
- THD <20%

LISTING:

- UL / cUL listed.
- DLC listed.
- Suitable for wet location.
- 5 years limited warranty.
- ARRA compliant. (optional)

SPECIFICATION

	Model#	Wattage	Lumens @ 3000K	Efficiency	Lumens @ 4000K	Efficiency	Lumens @ 5000K	Efficiency
MFL6	3SL	60W	7800lm	130 lm/W	8400lm	140 lm/W	8100lm	135 lm/W
		48W	6480lm	135 lm/W	7000lm	146 lm/W	6700lm	140 lm/W
		36W	5050lm	140 lm/W	5400lm	150 lm/W	5250lm	146 lm/W
		24W	3480lm	145 lm/W	3720lm	155 lm/W	3600lm	150 lm/W
	3SM	100W	13000lm	130 lm/W	14000lm	140 lm/W	13500lm	135 lm/W
		80W	10800lm	135 lm/W	11600lm	146 lm/W	11200lm	140 lm/W
		60W	8400lm	140 lm/W	9000lm	150 lm/W	8700lm	145 lm/W
		40W	5800lm	145 lm/W	6200lm	155 lm/W	6000lm	150 lm/W
	3SH	200W	26000lm	130 lm/W	28000lm	140 lm/W	27000lm	130 lm/W
		160W	20800lm	135 lm/W	23200lm	145 lm/W	22400lm	140 lm/W
		120W	16800lm	140 lm/W	18000lm	150 lm/W	17400lm	145 lm/W
		80W	11600lm	145 lm/W	12400lm	155 lm/W	12000lm	150 lm/W

PHOTOMETRICS

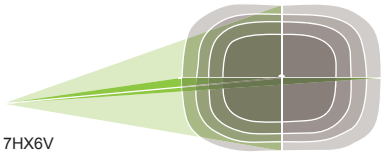

7HX6V

EPA RATING

	1	2@90°	2@120°	2@180°	3@90°	3@120°	4@90°
100W	0.2885	0.6097	0.7475	0.577	0.8982	0.8196	0.8982
200W	0.3868	0.8125	0.9973	0.7736	1.1993	1.0874	1.1993

UTOPIA LIGHTING reserves the right to change specifications, drawings, dimensions without prior notice. Visit our website for the latest product information.

MFL6 LED

ORDERING INFORMATION

EXAMPLE: *MFL6-60LED-50K-UNV-ND-BZ-KN*

MODEL	LED		COLOR TEMP.		VOLTAGE		FINISH		OPTICS	
MFL6	**3SL** **3SM** **3SH**	60/48/36/24W 100/80/60/40W 200/160/120/80W	**3T**	3000/4000/5000K	**UNV** **HV**	120-277V 277-480V	**BZ** ***BK** ***WH** ***GR** ****CC**	Dark Bronze RAL#8019 (Std.) Black RAL#9011 White RAL#9016 Gray RAL#7045 Custom Color * Non-standard finish with extra charge. ** Additional charge & set up fee.	**(Blank)**	7H x 6V

MOUNTING		OPTIONS	
KN	Knuckle Mount	**PC3**	Photocell 120-277V
TR	Trunnion Mount	**ARRA**	Assembled in USA for Buy American act
YK	Yoke Mount	**SP10**	Integrated 10kV/10kA surge protection
SF	Slip Fitter	**CASAMBI**	Contact factory for CASAMBI READY options
* Refer to configuration chart for availability			

60W(Knuckle Mount)

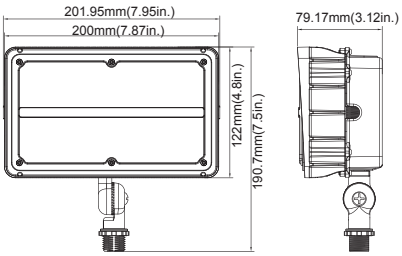

Net Weight
60W: 3.152 lb

100W(Slipfitter Mount)

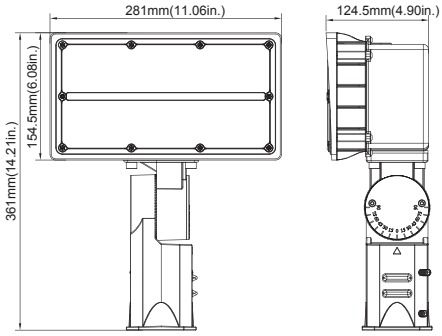

Net Weight
100W: 10.163 lb

200W(Slipfitter Mount)

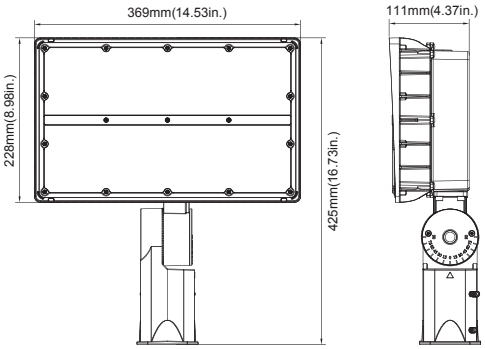

Net Weight
200W: 15.146 lb

60W(Trunnion Mount)

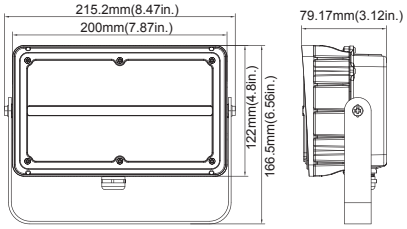

Net Weight
60W: 3.748 lb

100W(Yoke Mount)

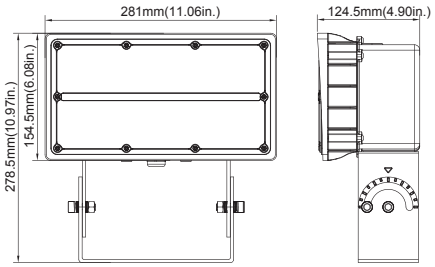

Net Weight
100W: 9.237 lb

200W(Yoke Mount)

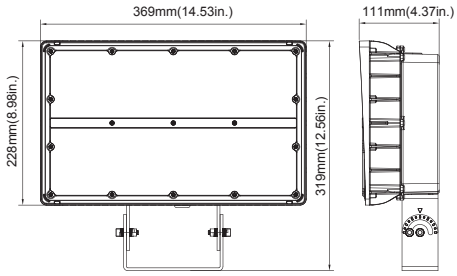

Net Weight
200W: 14.405 lb

UTOPIA LIGHTING reserves the right to change specifications, drawings, dimensions without prior notice. Visit our website for the latest product information.