Linear High Bay

Utopia

⚠ WARNING

- Turn power off before inspection, installation or removal.
- Installation must be performed by a qualified electrician or lighting technician.
- Before installation, maintenance or removal, disconnect all power and let the fixture cool down.
- Do not touch the fixture while it is in operation.
- If the fixture malfunctions, turn power off. Do not attempt repairs unless you are a qualified technician. Contact Utopia Lighting at (866) 471-7711.
- Not for use in environments with corrosive gases or liquids, or high-pressure water vapor.

Aircraft Cable Mounting DEFAULT

Inspect the fixture and accessories before installation.

1. Attach the hook of each aircraft cable to the mounting holes at each end of the fixture.
2. Remove the access plate and pull the leads out of the driver compartment.
3. Feed the supply wires through the access plate opening and complete the wiring. Reinstall the access plate, then connect the flexible conduit to the access plate opening.

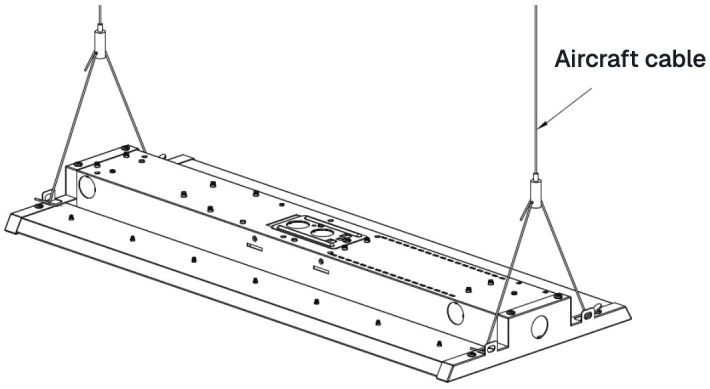

Conduit Pendant OPTIONAL

1. Secure the adjustable board inside the square junction box with the M4×8 flat head screws. Pass the 3/4 in conduit through the adjustable board and fasten it to the junction box (nut supplied by others).
2. Hook the fixture onto the junction box hanger and connect the wires.
3. Level the fixture and secure it to the junction box with the M5×8 screws.

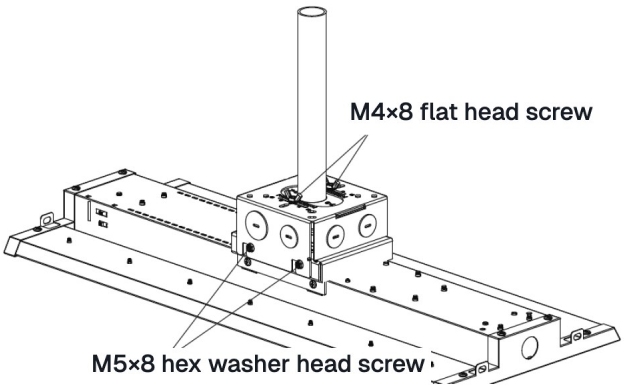

Surface Mounting OPTIONAL

1. Fasten the square junction box hanger to the ceiling junction box with the screws supplied with the junction box.
2. Hook the fixture's junction box base onto the hanger, pull out the wires and complete the wiring.
3. Level the fixture and secure it with the M5×8 screws.

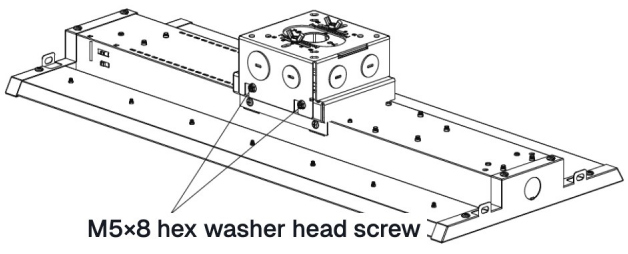

Power and CCT Selectable Version OPTIONAL

Set the wattage and color temperature for the application with the slide DIP switches on the fixture.

Input voltage	Power selectable	CCT selectable
120–277V	100W · 130W · 180W · 210W	4000K · 5000K
347–480V	110W · 145W · 190W · 225W	4000K · 5000K

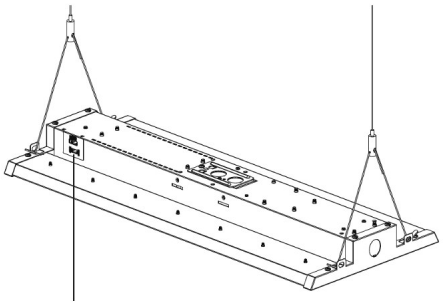

Power and CCT DIP switches

Wiring Diagram

Dimming versions: connect the fixture leads as shown.

Fixture lead	Without emergency battery	With emergency battery
Red	N/A	AC line (24/7)
Black	Line	AC line (switched)
White	Neutral	Neutral
Green/Yellow	Ground	Ground
Purple	Dim +	Dim +
Pink	Dim –	Dim –

Troubleshooting

1. Check that the line voltage at the fixture is correct. Refer to the wiring diagram.
2. Make sure the fixture is properly grounded.
3. If a motion sensor is used, make sure it is working properly.
4. 130W and 210W fixtures with an external emergency battery installed are suitable for aircraft cable mounting only.

Cleaning and Maintenance

CAUTION: Make sure the fixture is cool to the touch. Do not clean or service the fixture while it is energized.

Accessory List

Kit	Item	Description	Qty
Aircraft cable kit	Aircraft cable	1.5 × 1500 mm (1/16 × 59 in)	2
Mounting box kit	Square junction box	125 × 101 × 37.5 mm (4 15/16 × 4 × 1 1/2 in)	1
	Adjustable board	For junction box installation, 107 × 106 × 59 mm (4 3/16 × 4 3/16 × 2 5/16 in)	1
	Screw	M5×8 hex washer head Phillips screw	2
	Screw	M4×8 flat head screw	4