LRC-3G LED INSTALLATION INSTRUCTIONS

BEFORE YOU BEGIN
Read and follow all safety instructions

WARNING

RISK OF FIRE, EXPLOSION AND ELECTRIC SHOCK





- This product should be installed, inspected, and maintained by a qualified electrician only, in accordance with the NEC (National Electric Code) and all local codes.
- Turn off electrical power before inspection, installation or removal.
- Use only UL (or other NTRL) approved wire for input/output connections.
- Make sure LEDs and drivers are cool to touch when performing maintenance. Make sure the supply voltage is the same as the rated voltage of the luminaire.
- Do not install in a hazardous atmosphere, except where the ambient temperature does not exceed the rated operating temperature of the fixture.
- Keep tightly closed when in operation

Prepare Electrical Wiring



Electrical Requirements
Must check if the local voltage range is correspond with the working voltage of the fixture. Use min. 75ºC supply.



Grounding Instructions
The grounding and bonding of the overall system shall be done in accordance with NEC Article 600 and local codes.



Follow all applicable safety procedures and use Personal Protective Equipment such as hardhats, safety glasses, reflective vest, electrical safety gloves, fall protection equipment and safety toe boots during the installation, operation, and maintenance of the luminare.

* Any damage caused from improper installation will void warranty and not be accepted for RGA (Return Goods Authorization). Improper installation includes but not limited to field-drilled hole(s), improper gasket/silicone used and any damage caused during installation.

Contractor is responsible for adequately reinforcing ceilings to support luminaire weight. Utopia Lighting accepts no responsibility for inadequately reinforced ceilings. The information contained in this drawing is the sole property of Utopia Lighting.

Any reproduction in part or whole without the written permission of Utopia Lighting is prohibited and warranty is voided.

Utopia
310-327-7711
utopialightingus.com
info@utopialightingus.com

WARNING: RISK OF FIRE AND ELECTRICAL SHOCK. FIXTURE MUST BE INSTALLED BY A QUALIFIED ELECTRICIAN ONLY IN ACCORDANCE WITH NATIONAL, LOCAL BUILDING AND ELECTRICAL CODES. DISCONNECT POWER AT ELECTRICAL PANEL BEFORE SERVICING.

LRC-3G LED INSTALLATION INSTRUCTIONS

1. Surface Mount

1. loosen and remove the screws to separate the top half of the surface mount bracket.

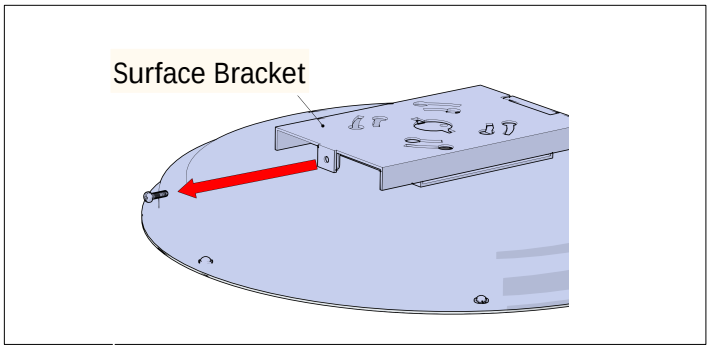

2. Mount the bracket to the desired surface using the appropriate hardware (provided by others).

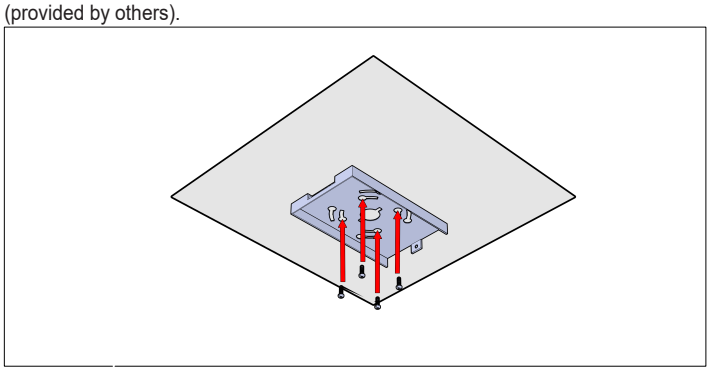

3. Hang the fixture onto the mounted bracket.

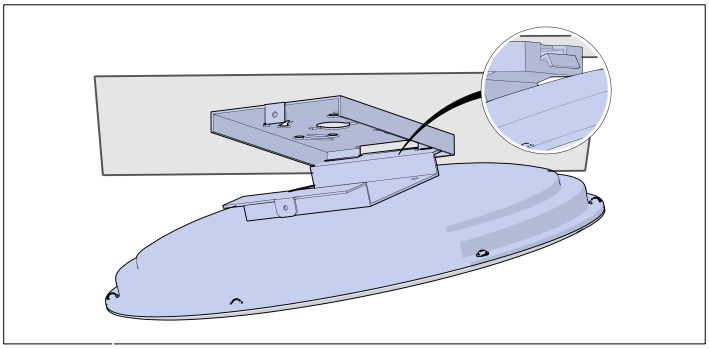

4. Make wire connection from the fixture to the main power supply.

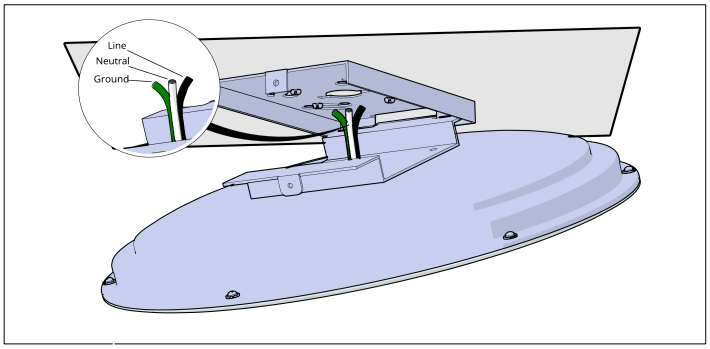

5. Raise the fixture to level and align the hole ready to lock the bracket.

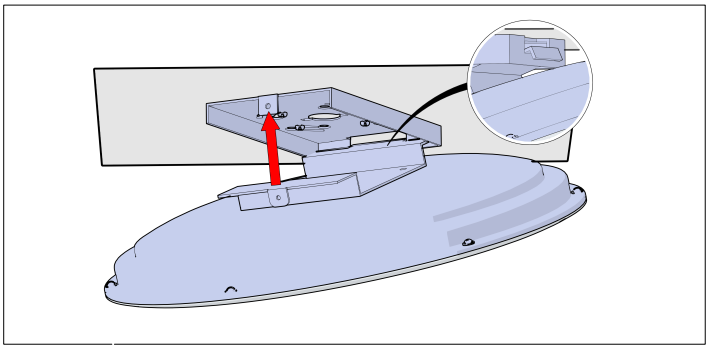

6. Secure the bracket with the locking screw.

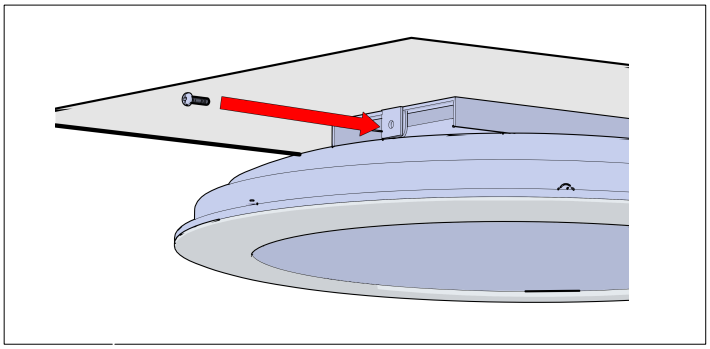

WIRING DIAGRAM

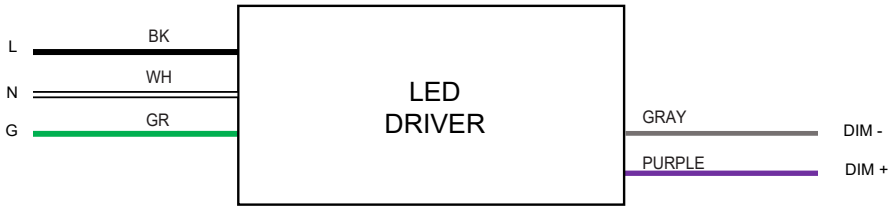

Utopia
310-327-7711
utopialightingus.com
info@utopialightingus.com

WARNING: RISK OF FIRE AND ELECTRICAL SHOCK. FIXTURE MUST BE INSTALLED BY A QUALIFIED ELECTRICIAN ONLY IN ACCORDANCE WITH NATIONAL, LOCAL BUILDING AND ELECTRICAL CODES. DISCONNECT POWER AT ELECTRICAL PANEL BEFORE SERVICING.

LRC-3G LED INSTALLATION INSTRUCTIONS

1. Pendant Mount (3/4" conduit)

1. Remove the locking screw to separate the top half of the mounting bracket.

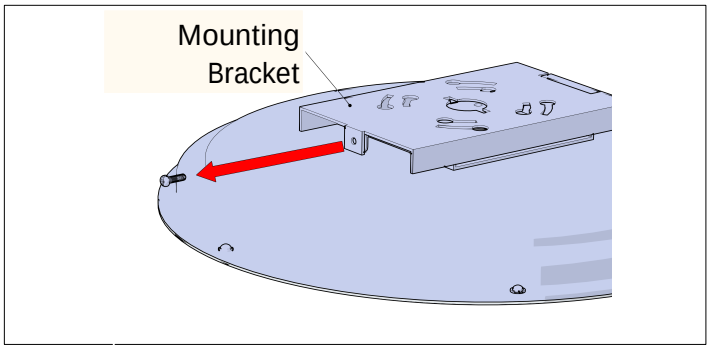

2. Mount the top bracket with a 3/4" conduit as shown below and secure with two lock-nuts (conduit by others).

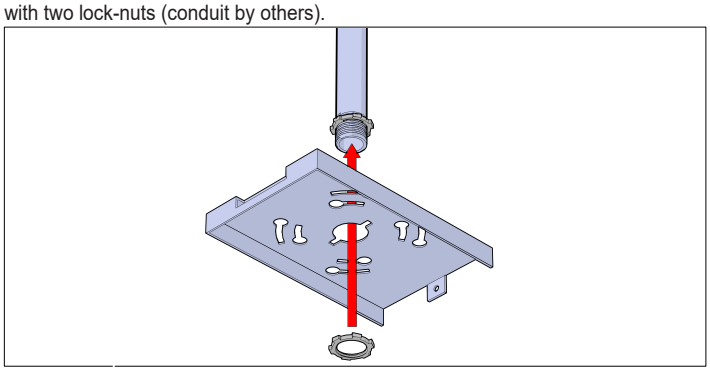

3. Hang the fixture onto the mounted bracket.

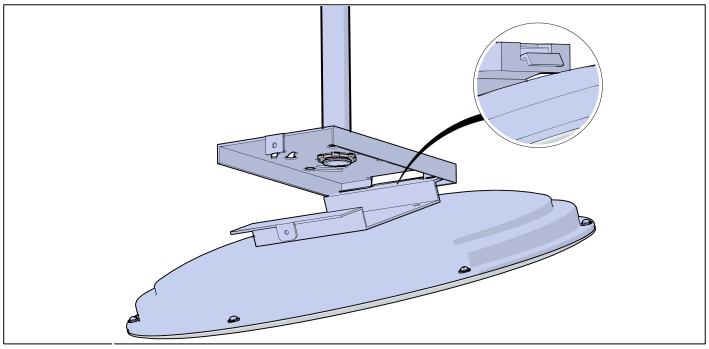

4. Feed the supply cable through the conduit and make a connection in the j-box.

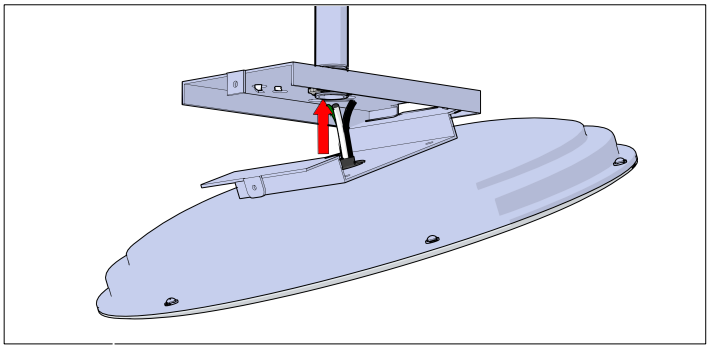

5. Raise the fixture to level and align the hole ready to lock the bracket.

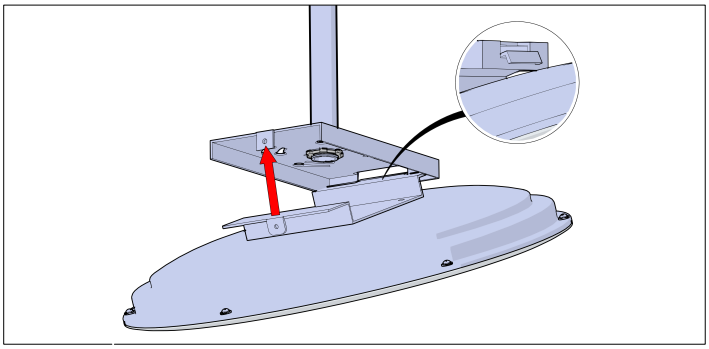

6. Secure the bracket with the locking screw.

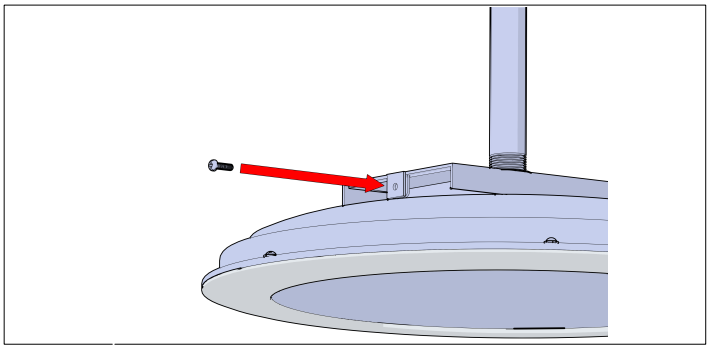

WIRING DIAGRAM

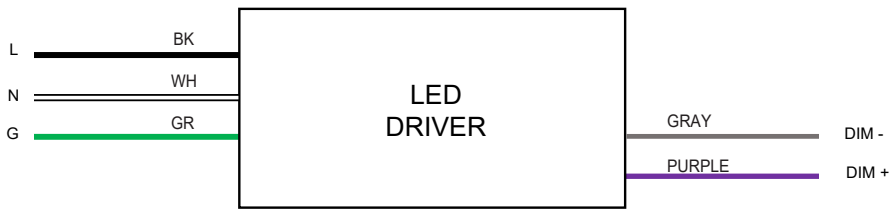

Utopia
310-327-7711
utopialightingus.com
info@utopialightingus.com

WARNING: RISK OF FIRE AND ELECTRICAL SHOCK. FIXTURE MUST BE INSTALLED BY A QUALIFIED ELECTRICIAN ONLY IN ACCORDANCE WITH NATIONAL, LOCAL BUILDING AND ELECTRICAL CODES. DISCONNECT POWER AT ELECTRICAL PANEL BEFORE SERVICING.