CUBE4-WET **WALL MOUNT** INSTALLATION INSTRUCTIONS

BEFORE YOU BEGIN

Read and follow all safety instructions

WARNING

RISK OF FIRE, EXPLOSION AND ELECTRIC SHOCK







- This product should be installed, inspected, and maintained by a qualified electrician only, in accordance with the NEC (National Electric Code) and all local codes.
- Turn off electrical power before inspection, installation or removal.
- Use only UL (or other NTRL) approved wire for input/output connections.
- Make sure LEDs and drivers are cool to touch when performing maintenance.
  Make sure the supply voltage is the same as the rated voltage of the luminaire.
- Do not install in a hazardous atmosphere, except where the ambient temperature does not exceed the rated operating temperature of the fixture.
- Keep tightly closed when in operation

Prepare Electrical Wiring



Electrical Requirements

Must check if the local voltage range is correspond with the working voltage of the fixture. Use min. 75ºC supply.



Grounding Instructions

The grounding and bonding of the overall system shall be done in accordance with NEC Article 600 and local codes.



Follow all applicable safety procedures and use Personal Protective Equipment such as hardhats, safety glasses, reflective vest, electrical safety gloves, fall protection equipment and safety toe boots during the installation, operation, and maintenance of the luminare.

Utopia
866-471-7711
utopialighting.com
support@utopialighting.com

Contractor is responsible for adequately reinforcing ceilings to support luminaire weight.
Utopia Lighting accepts no responsibility for inadequately reinforced ceilings.
The information contained in this drawing is the sole property of Utopia Lighting.
Any reproduction in part or whole is prohibited and warranty is voided.

WARNING:



RISK OF FIRE AND ELECTRICAL SHOCK. FIXTURE MUST BE INSTALLED BY A QUALIFIED ELECTRICIAN ONLY IN ACCORDANCE WITH NATIONAL, LOCAL BUILDING AND ELECTRICAL CODES. DISCONNECT POWER AT ELECTRICAL PANEL BEFORE SERVICING.

CUBE4-WET **WALL MOUNT** INSTALLATION INSTRUCTIONS

WALL MOUNT BRACKET

*Dimensions are in inches (millimeters).

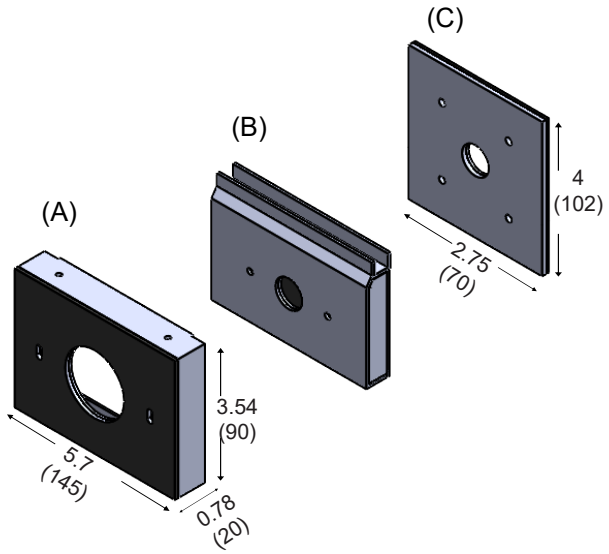

* Gaskets pre-applied.

MOUNTING LENGTH INFORMATION

CUBE4-WET Individual Run

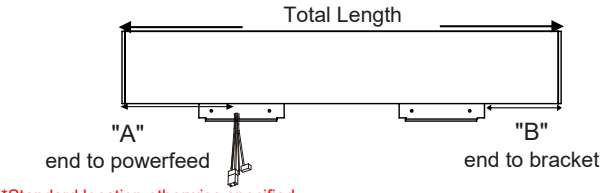

*Standard location otherwise specified.

ITEM	TOTAL LENGTH	"A"	"B"
CUBE-IND 2FT	24-1/8"	6-5/8"	4-1/4"
CUBE-IND 3FT	36-1/8"	10"	7-11/16"
CUBE-IND 4FT	48-1/8"	10"	7-11/16"
CUBE-IND 6FT	72-1/8"	10"	7-11/16"
CUBE-IND 8FT	96-1/8"	10"	7-11/16"

CUBE4-WET Continuous Run

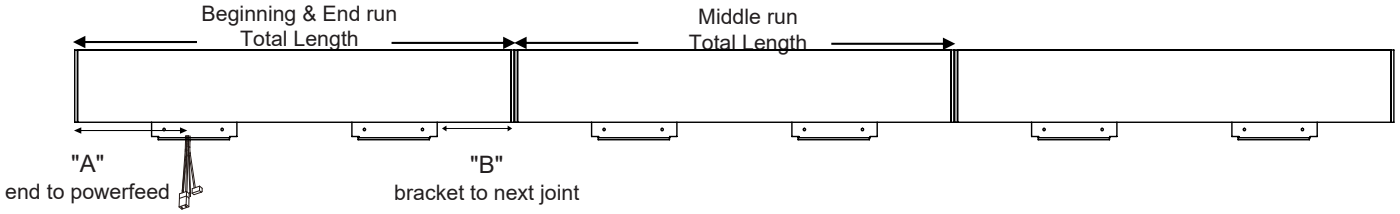

*Standard location otherwise specified.

ITEM	Beg. & End Run Total Length	Middle Run Total Length	"A"	"B"
CUBE-CON 2FT	24-1/16"	24"	6-5/8"	4-3/16"
CUBE-CON 3FT	36-1/16"	36"	10"	7-5/8"
CUBE-CON 4FT	48-1/16"	48"	10"	7-5/8"
CUBE-CON 6FT	72-1/16"	72"	10"	7-5/8"
CUBE-CON 8FT	96-1/16"	96"	10"	7-5/8"

866-471-7711
utopialighting.com
support@utopialighting.com

Contractor is responsible for adequately reinforcing ceilings to support luminaire weight.
Utopia Lighting accepts no responsibility for inadequately reinforced ceilings.
The information contained in this drawing is the sole property of Utopia Lighting.
Any reproduction in part or whole is prohibited and warranty is voided.

WARNING:

RISK OF FIRE AND ELECTRICAL SHOCK. FIXTURE MUST BE INSTALLED BY A QUALIFIED ELECTRICIAN ONLY IN ACCORDANCE WITH NATIONAL, LOCAL BUILDING AND ELECTRICAL CODES. DISCONNECT POWER AT ELECTRICAL PANEL BEFORE SERVICING.

CUBE4-WET **WALL MOUNT** INSTALLATION INSTRUCTIONS

INDIVIDUAL INSTALLATION

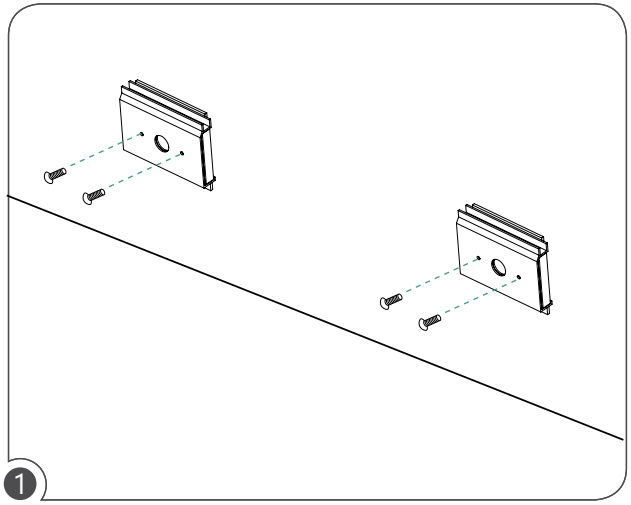

1

Fix and secure the outer wall mount bracket (B +C) on the wall, screws by others.

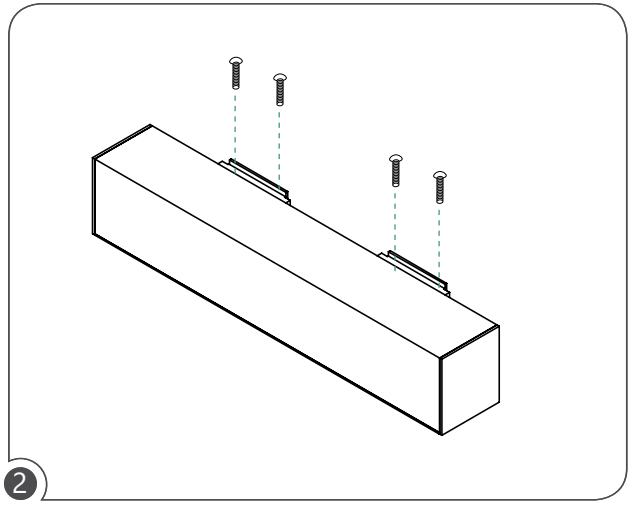

2

Place the fixture and secure against the wall. Make sure to fix inner (A) and outer (B+C) wall mount brackets tightly with screws provided.

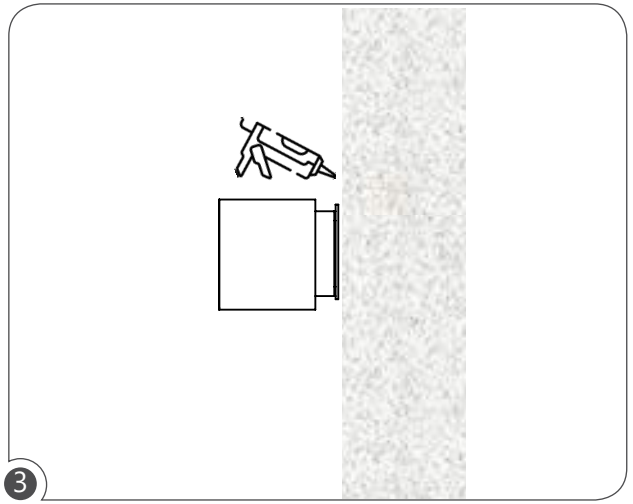

3

Additional waterproof silicone must be applied at the following areas:
- surroundings & edge of fixture and (A)
- surroundings & edge of (C) and wall

**** Utopia Lighting will not take any responsibility, If you don't add silicone caulk on mounting surface.(Must apply silicone caulk to be certi ied under UL.)***

Utopia
866-471-7711
utopialighting.com
support@utopialighting.com

Contractor is responsible for adequately reinforcing ceilings to support luminaire weight. Utopia Lighting accepts no responsibility for inadequately reinforced ceilings. The information contained in this drawing is the sole property of Utopia Lighting. Any reproduction in part or whole is prohibited and warranty voided.

WARNING: RISK OF FIRE AND ELECTRICAL SHOCK. FIXTURE MUST BE INSTALLED BY A QUALIFIED ELECTRICIAN ONLY IN ACCORDANCE WITH NATIONAL, LOCAL BUILDING AND ELECTRICAL CODES. DISCONNECT POWER AT ELECTRICAL PANEL BEFORE SERVICING.

CUBE4-WET **WALL MOUNT** INSTALLATION INSTRUCTIONS

CONTINUOUS RUN INSTALLATION

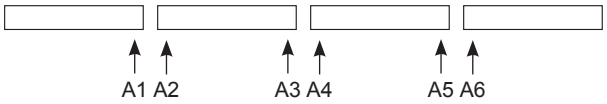

Align continuous row fixtures in numerical order under the same alphabet family.

provided (per joint):

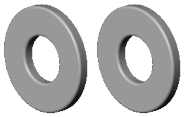

Washer (2pcs)

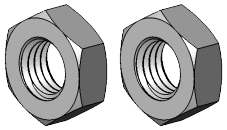

Hexagon locknuts (2pcs)



Long bolt (1pc)

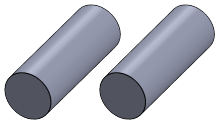

Stopper (2pcs)

Utopia
866-471-7711
utopialighting.com
support@utopialighting.com

Contractor is responsible for adequately reinforcing ceilings to support luminaire weight. Utopia Lighting accepts no responsibility for inadequately reinforced ceilings. The information contained in this drawing is the sole property of Utopia Lighting. Any reproduction in part or whole is prohibited and warranty voided.

WARNING: RISK OF FIRE AND ELECTRICAL SHOCK. FIXTURE MUST BE INSTALLED BY A QUALIFIED ELECTRICIAN ONLY IN ACCORDANCE WITH NATIONAL, LOCAL BUILDING AND ELECTRICAL CODES. DISCONNECT POWER AT ELECTRICAL PANEL BEFORE SERVICING.

CUBE4-WET **WALL MOUNT** INSTALLATION INSTRUCTIONS

CONTINUOUS RUN INSTALLATION

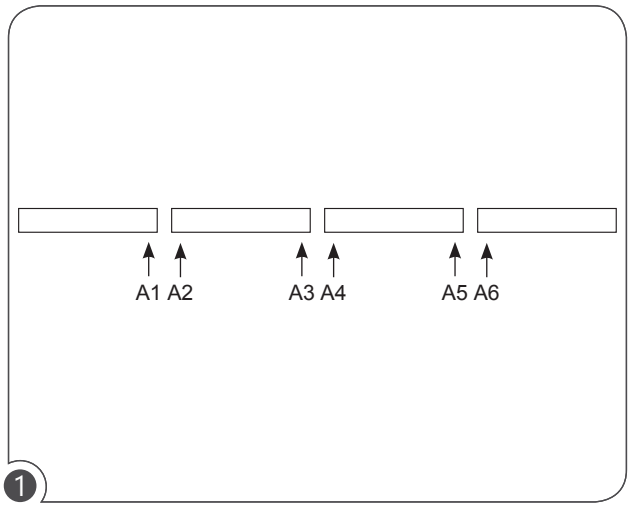

1

Align continuous row fixtures in numerical order under the same alphabet family.

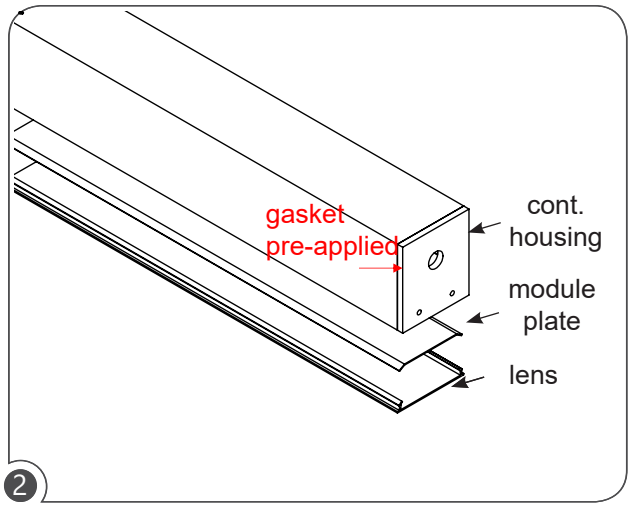

2

Remove module plate and lens from housing.

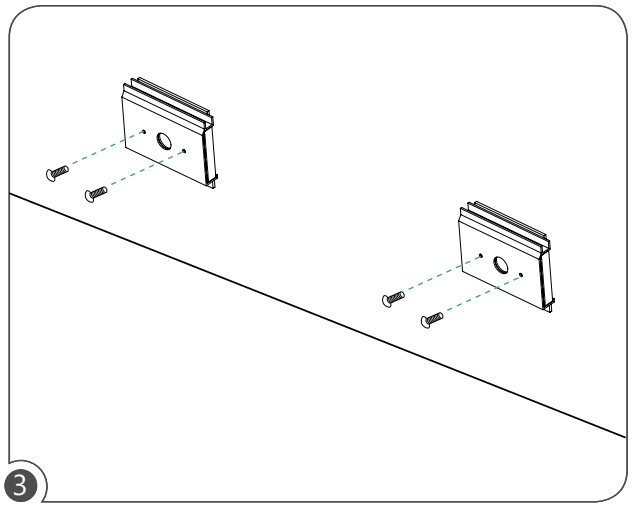

3

Fix and secure the outer wall mount bracket (B +C) on the wall, screws by others.

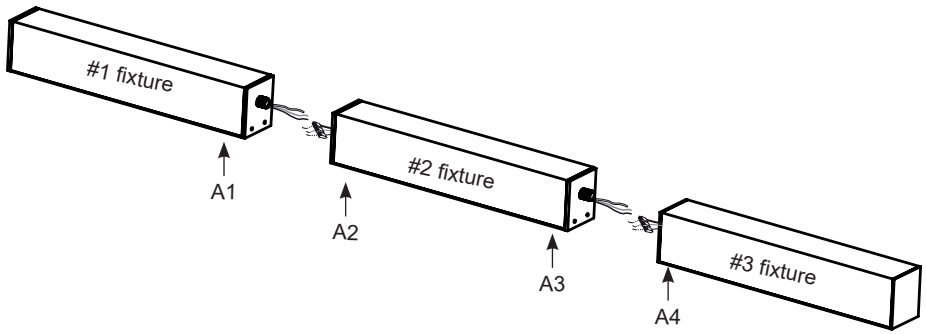

* 1pc long bolt & 2pcs waterproof washer & 2 locknuts provided.

4

After first power-feed fixture has been installed on the wall, repeat for each subsequent fixture. Make continuous run wiring connections through the long bolt.

Utopia
866-471-7711
utopialighting.com
support@utopialighting.com

Contractor is responsible for adequately reinforcing ceilings to support luminaire weight. Utopia Lighting accepts no responsibility for inadequately reinforced ceilings. The information contained in this drawing is the sole property of Utopia Lighting. Any reproduction in part or whole is prohibited and warranty voided.

WARNING: RISK OF FIRE AND ELECTRICAL SHOCK. FIXTURE MUST BE INSTALLED BY A QUALIFIED ELECTRICIAN ONLY IN ACCORDANCE WITH NATIONAL, LOCAL BUILDING AND ELECTRICAL CODES. DISCONNECT POWER AT ELECTRICAL PANEL BEFORE SERVICING.

CUBE4-WET **WALL MOUNT** INSTALLATION INSTRUCTIONS

CONTINUOUS RUN INSTALLATION

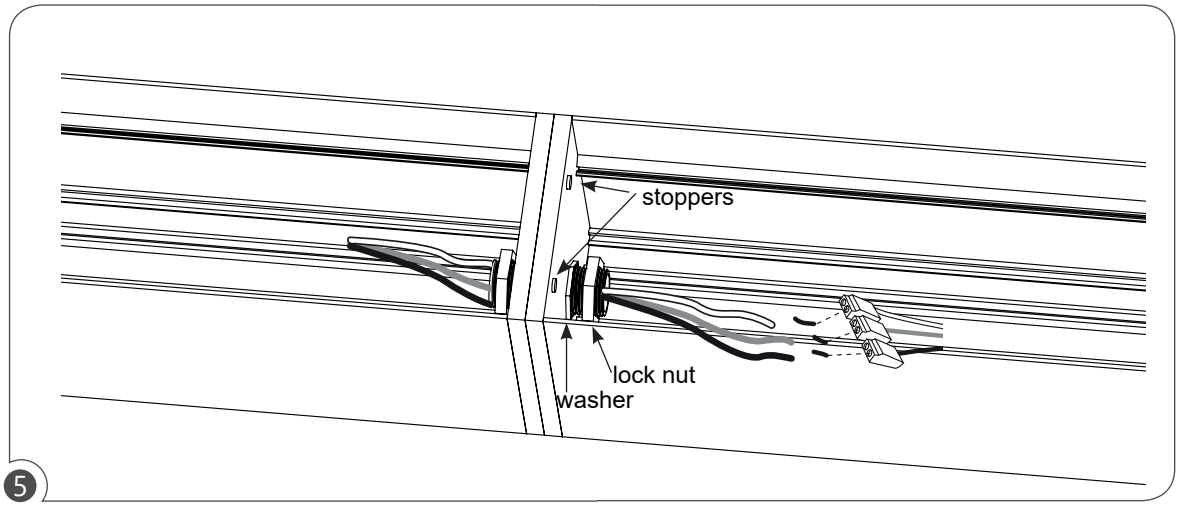

5

Tighten (2) washers and (2) lock nuts from each side, then insert (2) stoppers. Stoppers must be flushed to the end cap.

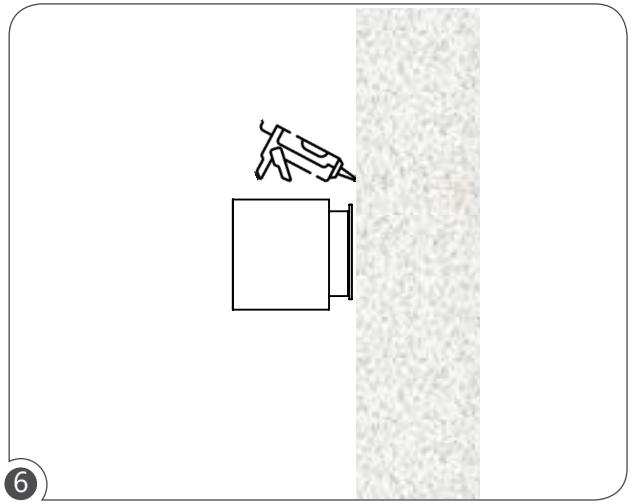

6

Additional waterproof silicone must be applied at the following areas:
- surroundings & edge of fixture and (A)
- surroundings & edge of (C) and wall

**** Utopia Lighting will not take any responsibility, If you don't add silicone caulk on mounting surface.(Must apply silicone caulk to be certi ied under UL.)***

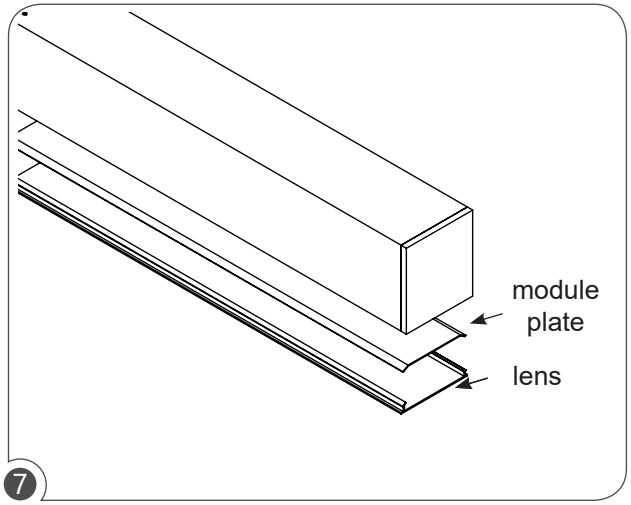

7

Re-install the module plate and lens to complete the installation.

Utopia
866-471-7711
utopialighting.com
support@utopialighting.com

Contractor is responsible for adequately reinforcing ceilings to support luminaire weight. Utopia Lighting accepts no responsibility for inadequately reinforced ceilings. The information contained in this drawing is the sole property of Utopia Lighting. Any reproduction in part or whole is prohibited and warranty voided.

WARNING: RISK OF FIRE AND ELECTRICAL SHOCK. FIXTURE MUST BE INSTALLED BY A QUALIFIED ELECTRICIAN ONLY IN ACCORDANCE WITH NATIONAL, LOCAL BUILDING AND ELECTRICAL CODES. DISCONNECT POWER AT ELECTRICAL PANEL BEFORE SERVICING.