LAL

Project Name:	
Type:	



FEATURES:

- Rugged, One-piece die cast aluminum housing.
- Die-cast integral heat sink to provide thermal management.
- Low profile, 3G vibration rated compact design minimizes wind load requirements.
- Housing is completely sealed against moisture and environmental contaminants.
- Operating temperature: -40ºC to 40ºC (-40ºF to 104ºF)
- Suitable for mounting heights up to 50ft.
- Field adjustable CCT & Wattage.

OPTIC:

- PC optic.
- Distribution: Type2, Type3, Type4, Type5
- House side shield, glare shield and back light control shield options are available.

LED:

- Toyoda LED
- Color Temperature: field adjustable 30/40/50K
- Lumen efficiency: Color rendering index: >70
- Life span: 100,000 hours
- Lumen Maintenance L70 greater than 100,000 hours IESNA TM-21.

MOUNTING:

- Slip Fitter (for 2-3/8” pole).
- Square / Round pole arm.
- Wall mount.
- Trunnion mount.
- Adjustable square pole mount.

ELECTRICAL:

- 0-10V dimming standard.
- 120-277V, 50/60Hz, 347-480V optional.
- THD: ≤20%
- PF: ≥90%
- 10kV (120-277V), 20kV (347-480V) as standard.

LISTING:

- UL listed.
- DLC listed. [1]
- Suitable for wet location.
- 5 years limited warranty.
- ARRA compliant (optional).
- TAA compliant. (optional). [2]

APPLICATION

LED Shoebox/Area Light series can be used in parking lot, urban roads, industrial areas, residential areas, sidewalks, schools, and gardens. Wide detection area, range up to 50FT in diameter.

ORDERING INFORMATION

EXAMPLE: *LAL-140SLED-3T-UNV-BZ-SF*

MODEL	LED		COLOR TEMP.		DISTRIBUTION		VOLTAGE	
LAL	**100SLED**	Field Selectable 40/60/80/100W LED	**-3T**	Field Selectable 30/40/50K	**T2**	Type II	**UNV**	120-277V (Std.)
	140SLED	Field Selectable 60/90/120/140W LED			**T3**	Type III	**HV**	347-480V
	180SLED	Field Selectable 72/108/144/180W LED			**T4**	Type IV		
	250SLED	Field Selectable 100/150/200/250W LED						
	300SLED	Field Selectable 120/180/240/300W LED						
	400SLED	Field Selectable 300/320/360/400W LED	**-2T**	Field Selectable 40/50K	**T5**	Type V		

FINISH		MOUNTING		OPTIONS	
BZ	Dark Bronze RAL#8019 (Std.)	**SF**	Slip Fitter (2-3/8” O.D)	**TLPC3**	3-Pin Receptacle and Twist Lock Photocell Installed 120V-277V
***BK**	Black RAL#9011	**PMS**	Square Pole Mount Arm (4~5”)	**TLPC4**	3-Pin Receptacle and Twist Lock Photocell Installed 480V
***WH**	White RAL#9016	**PMR**	Round Pole Mount Arm (4”~5” dia.)	**RC7**	NEMA 7-wire receptacle only (120-277V)
***GR**	Gray RAL#7045	**WM**	Wall Mount	**BRI823**	Integrated Bi-level occupancy sensor with daylight, 0-10V, adjustable via DIP switch
****CC**	Custom Color	**TR**	Trunnion Mount	**ANT-6-4T**	Plug-and-Play Bi-Level PIR Sensor
	* Non-standard finish with extra charge. ** Additional charge & set up fee.	**ASM**	Adjustable square pole mount	**ANT-6-4T-BLE-GE**	Plug-and-Play GEBC Bluetooth Bi-Level PIR Sensor
				ANT-5-4T-PC	Plug-and-Play Photocell sensor (no motion sensing)
				RC-100	Remote control for BRI and ANT sensors
				ARRA	Assembled in USA
				TAA	TAA compliant
				BLC	Back light control shield
				HS	House Side Shield
				GS	Glare Shield
				ZINC	Zinc powder coating, an anti-corrosive primer (applied on top of selected finish)
				CASAMBI	Contact factory for CASAMBI READY options

NOTES:
1. DesignLights Consortium® (DLC) qualified product. Not all versions of this product may be DLC qualified.
   Please check the DLC Qualified Products List at www.designlights.org/QPL to confirm which versions are qualified.
2. It is not possible to select it with the ARRA option.

UTOPIA LIGHTING reserves the right to change specifications, drawings, dimensions without prior notice. Visit our website for the latest product information.

LAL

CONFIGURATIONS

Series	Model#	AC Input	Distribution	3000K		4000K		5000K		B.U.G.
				Lumens	Lumens / Watt	Lumens	Lumens / Watt	Lumens	Lumens / Watt	
LAL	100SLED	40W	T3	6400 lm	160 lm/W	6800 lm	170 lm/W	6560 lm	164 lm/W	B3-U0-G3
		60W		9300 lm	155 lm/W	10000 lm	167 lm/W	9600 lm	160 lm/W	
		80W		12000 lm	150 lm/W	13000 lm	163 lm/W	12500 lm	156 lm/W	
		100W		14500 lm	145 lm/W	15800 lm	158 lm/W	15000lm	150 lm/W	
	140SLED	60W		9700 lm	162 lm/W	10600 lm	177 lm/W	10000 lm	167 lm/W	B3-U0-G3
		90W		14000 lm	156 lm/W	15500 lm	172 lm/W	14500 lm	161 lm/W	
		120W		18000 lm	150 lm/W	20000 lm	167 lm/W	18500 lm	154 lm/W	
		140W		20000 lm	143 lm/W	23000 lm	164 lm/W	21000 lm	150 lm/W	
	180SLED	72W		10500 lm	146 lm/W	11500lm	160 lm/W	10800 lm	150 lm/W	B3-U0-G3
		108W		15300 lm	142 lm/W	16800lm	156 lm/W	15700 lm	145 lm/W	
		144W		20200 lm	140 lm/W	22000lm	153 lm/W	20600 lm	143 lm/W	
		180W		24800 lm	138 lm/W	27000lm	150 lm/W	25200 lm	140 lm/W	
	250SLED	100W		14500 lm	145 lm/w	16000 lm	160 lm/w	14800 lm	148 lm/w	B4-U0-G4
		150W		21300 lm	142 lm/w	23200 lm	155 lm/w	21800 lm	145 lm/w	
		200W		27500 lm	138 lm/w	30400 lm	152 lm/w	28400 lm	142 lm/w	
		250W		33500 lm	134 lm/w	37000 lm	148 lm /w	34500 lm	138 lm /w	
	300SLED	120W		19200 lm	160 lm/W	21500 lm	179 lm/W	20000 lm	167 lm/W	B4-U0-G4
		180W		28000 lm	156 lm/W	30000 lm	160 lm/W	28500 lm	158 lm/W	
		240W		35000 lm	146 lm/W	38500 lm	167 lm/W	36000 lm	150 lm/W	
		300W		41000 lm	137 lm/W	45000 lm	179 lm/W	42000 lm	140 lm/W	
	400SLED	300W	T2	-		47000lm	162 lm/W	46000 lm	159 lm/W	B5-U0-G5
		320W				51000lm	159 lm/W	50000 lm	156 lm/W	
		360W				56000lm	156 lm/W	55000 lm	153 lm/W	
		400W				60500lm	151 lm/W	60000 lm	150 lm/W	

EPA OF AREA LIGHT

Item	Mounting	 1	 2 @90°	 2 @120°	 2@180°	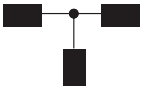 3 @90°	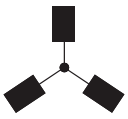 3 @120°	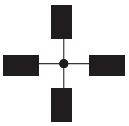 4 @90°
100 / 140 / 180SLED	Pole Mount	0.3632	0.6849	0.8861	0.7264	1.0481	1.2078	1.0481
250 / 300 / 400SLED		0.4758	0.8091	1.059	0.9516	1.2849	1.3923	1.2849



HS (House Side Shield) option



GS (Glare Shield) option



BLC (Back Light Control Shield) option

UTOPIA LIGHTING reserves the right to change specifications, drawings, dimensions without prior notice. Visit our website for the latest product information.

LAL

All dimensions are in inches (millimeters).

100/ 140/ 180SLED

(Adjustable Square Mount)

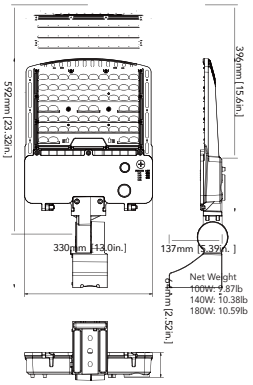

(Slip Fitter)

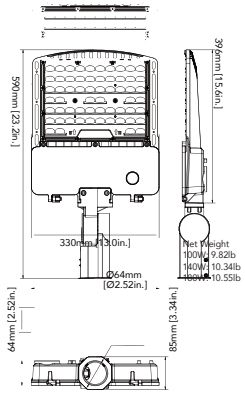

(Wall Mount)

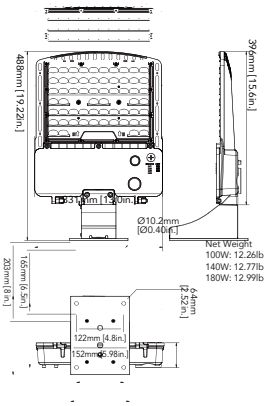

(Pole Mount)

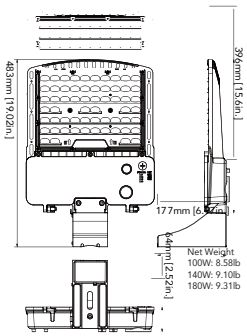

(Trunnion Mount)

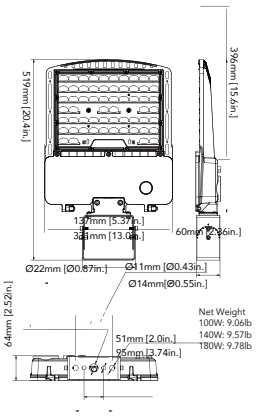

250/ 300/ 400SLED

(Adjustable Square Mount)

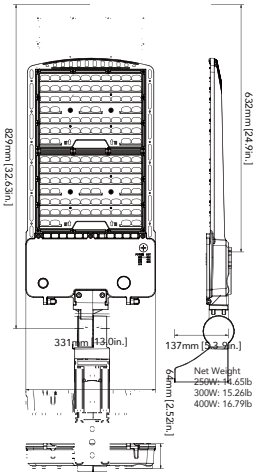

(Slip Fitter)

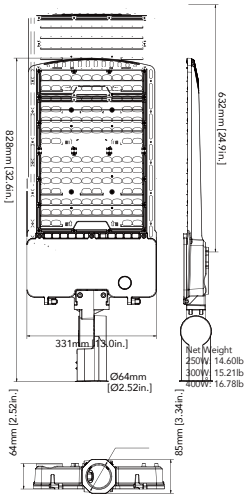

(Wall Mount)

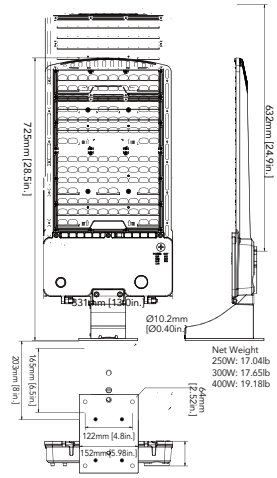

(Pole Mount)

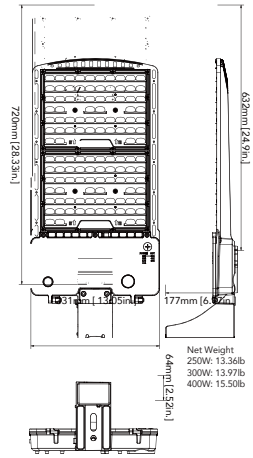

(Trunnion Mount)

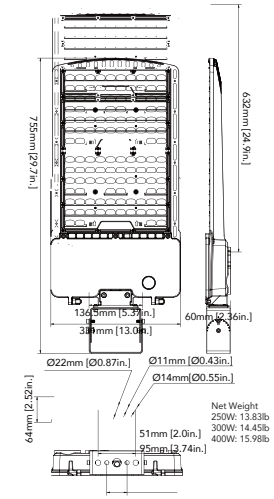

Sheilding Comparison (At 140W, 4000K, T3 / 20' AFG)

Color	Label	Lumens	Description
Black	No Shield	22 693	LAL-140SLED-T3-UNV
Blue	HS	19 358	LAL-140SLED-3T-UNV-HS
Pink	GS	14 330	LAL-140SLED-3T-UNV-GS
Green	BLC	11 284	LAL-140SLED-3T-UNV-BLC

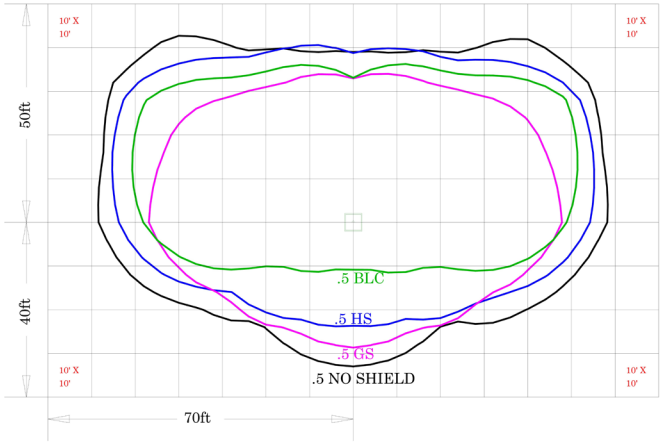

UTOPIA LIGHTING reserves the right to change specifications, drawings, dimensions without prior notice. Visit our website for the latest product information.

LAL

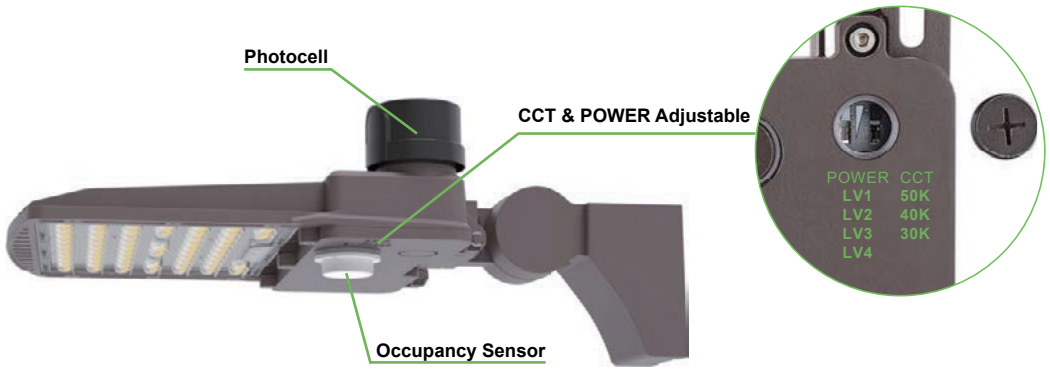

Sensitivity	100%
Stand-by time/Hold-time	10 Sec.
Detection	When sunlight (daylight) is detected
Dimming Level	20%
Dimming Time	24 hours (* It will dim when daylight is detected)

Detection angle	360º
Detection zone	Max. coverage 60' diameter from 40' height
High mode	0-10V/ default 10V
Low mode	Off / 0-9.8V / default 1V
Operating temperature	-104ºF ~ 158ºF (-40ºC ~ 70ºC)
Operating Humidity	20-90%
Rating	IP66

MOUNTING



PMS/R **SF** **WM** **TR** **ASM**

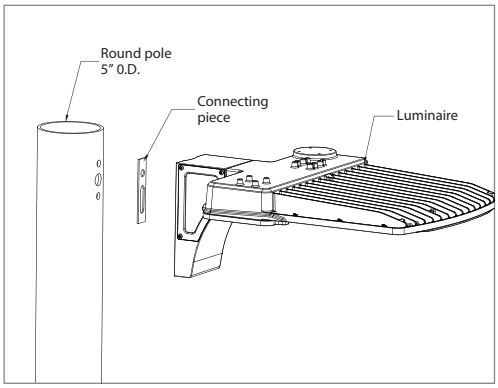

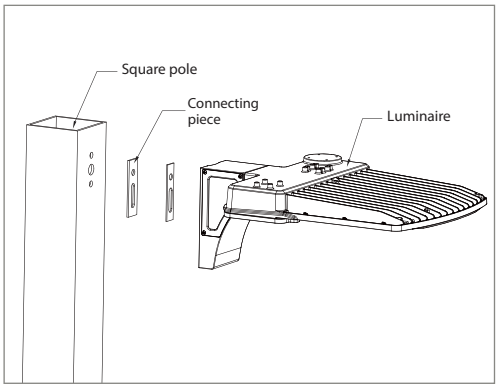

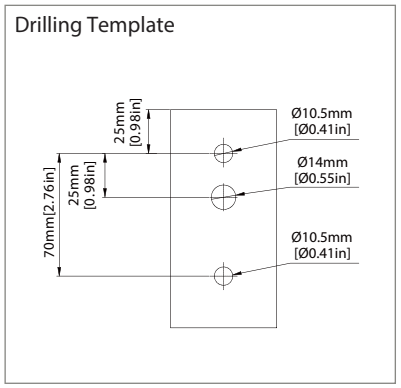

UTOPIA LIGHTING reserves the right to change specifications, drawings, dimensions without prior notice. Visit our website for the latest product information.