Revised: 3.27.2026

CUBE2-Y

Project Name:	
Type:	

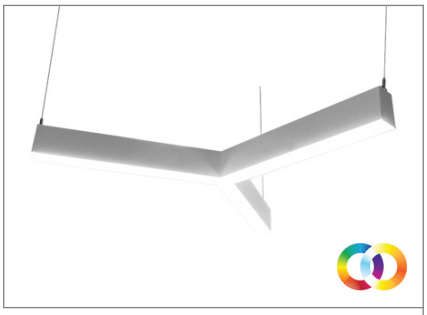

APPLICATION

These color capable luminaires bring flexibility and open doors to various types of applications. The RGB technology is a combination of three primary colors - red, green, and blue - to form a different array of colors. The RGBW technology is a combination of those three primary colors in addition to white. Additional white LEDs illuminates a much purer white tone and brings flexibility for color mixing through the RGB chips.Playing with different colors of the LEDs can form infinite color hue possibilities to not only just illuminate space, but manipulate for your desired hue and shades. Flexible control solutions from wireless remote, Bluetooth, to DMX512 with a wall mount touch panel can provide an ultimate solution to optimize the needs from residential to commercial, healthcare, education, retails, entertainment, office, and more.

MOUNTING:

- Pendant, surface mount.

FINISH:

- Standard powder-coat textured white paint finish on exposed trim.
- Consult factory for custom colors.
- Comes with snap-in acrylic lens as standard.

LISTING:

- UL /cUL listed.
- Listed to UL 1598 and UL 8750
- UL listed for dry & damp location
- Assembled in USA.
- Warranty:
  Power Supply: 5 years limited warranty.
  DMX: 3 years limited warranty.
  LED: 3 years limited warranty.

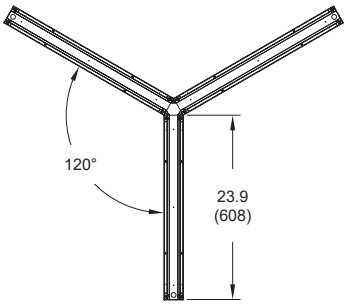

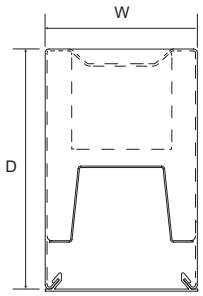

Specifications: CUBE2

Width: 2.5 (64)
Depth: 4 (101)

All dimensions are in inches (millimeters).

- MOUNTING DETAILS

Surface

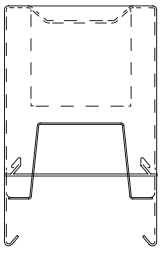

CABLE

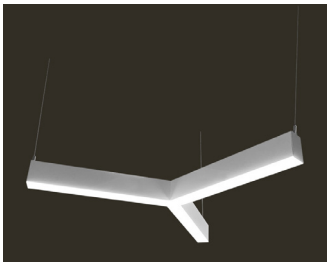

UTOPIA LIGHTING reserves the right to change specifications, drawings, dimensions without prior notice. Visit our website for the latest product information.

CUBE2-Y

ORDERING INFORMATION

EXAMPLE: *CUBE2-Y-DLO-RGBW-30K-UNV-X1-AC48-CV24-BLT*

MODEL	SHAPE		LED Downlight		LED Uplight		Uplight Cover		SYSTEM [1, 2]	
CUBE2	Y	Y shape	DLO DHO	Low output, 9.3W/ft High output, 18.6W/ft	(Blank) ULO	No Uplight Low output, 9.3W/ft	(Blank) UPC	None Non-optic frosted cover	RGBW-27K	RGBW with wired, wireless or Bluetooth solution, 2700K white
	CM	Must provide a sketch							RGBW-30K	RGBW with wired, wireless or Bluetooth solution, 3000K white
									RGBW-40K	RGBW with wired, wireless or Bluetooth solution, 4000K white
									RGBW-TW	RGB + Tunable White with wired, wireless or Bluetooth solution, 2700K-6500K tunable white

MOUNTING		VOLTAGE		FIXTUER FINISH		CORD FINISH (for pendant)		CANOPY FINISH (for pendant)	
(Blank) S	Pendant Ceiling Surface	UNV 120 277	120-277V 120V 277V	(Blank) BK SV **CC *AMB	Matte White RAL #9003 (Std.) Black RAL #9001 Silver (Cardinal #T353-GR06) Custom Color Anti-Microbial Coating (Matte Skye White)	(Blank) *BKC	White (Std.) Black [3]	(Blank) *BC *SC *CSS	White (Std.) Black Canopy Silver Canopy Custom Canopy Color (White is Std.)

* Non-standard finish with extra charge.
** Additional charge & set up fee.

CEILING TYPE (for pendant)		SUSPENSION LENGTH (for pendant)		LED DRIVER		CONTROLS [5]	
X1	15/16" grid T-bar ceiling	AC48	Adjustable Aircraft Cable Canopy 48"L	CV24	24VDC Power Supply	WL-MZ-WH	4-Zone RF remote, white
X2	Hard ceiling	AC96	Adjustable Aircraft Cable Canopy 96"L			WL-MZ-BK	4-Zone RF remote, black
X3	Sloped Hard ceiling	ST24	Stem Canopy 24"L			BLT	Bluetooth / Smartphone App
X4	9/16" T-bar ceiling	ST48	Stem Canopy 48"L	4DMX	4-Channel DMX512 decoder [4]	(Blank)	No options or controls from below
X5	9/16" Screw Slot ceiling					DMXT14	4-zone DMX512 wall mount touch panel, 100-240VAC input only
						DMXT8	4-zone DMX512 wall mount touch panel, 100-240VAC input only 5vdc adapter provided

* Contact factory for custom length.
* add "FC" at the end of stem length for field cuttable stem kit (Ex) ST48FC)

OPTIONS	
UDSC	Up and Down separate control
EMG8	8W EM Battery Backup (CEC Compliant EM) [6]
EMG15	15W EM Battery Backup (CEC Compliant EM) [6]
EMG20	20W EM Battery Backup (CEC Compliant EM) [6]
EMG25	25W EM Battery Backup (CEC Compliant EM) [6]
COC	Separated EM feed for City of Chicago code
WL-HLD-WH	Remote holder for WL-MZ, white
WL-HLD-BK	Remote holder for WL-MZ, black

NOTES:
1. Custom wattage or lumen is not available.
2. Refer to RGBW chart to find more information.
3. Not available with EM Battery Backup.
4. Refer to DMX chart to find more information.
5. Refer to Table 1 and Table 2 to find more information.
6. CCT of the Emergency will match your choice of the RGBW-xxK.

UTOPIA LIGHTING reserves the right to change specifications, drawings, dimensions without prior notice. Visit our website for the latest product information.

CUBE2-Y

RGBW CONFIGURATION

Input Voltage	24V
Watt & Lumen Efficiency	9.3 W/FT, 563 LM/FT, 60.53 LM/W (DLO) 18.6 W/FT, 1126 LM/FT, 60.53 LM/W(DHO)
Lumen Output	Red: 36.82 LM/FT (DLO) 73.64 LM/FT (DHO)
	Green: 79.55 LM/FT (DLO) 159.10 LM/FT (DHO)
	Blue: 25.82 LM/FT (DLO) 51.64 LM/FT (DHO)
	White: DLO - 100.35 lm/W (30K), 116.8 lm/W (40K) DHO - 100.35 lm/W (30K), 116.8 lm/W (40K)
CRI for white LEDs	95
Color Consistency	3-step MacAdam binning
Lumen Maintenance	> 50,000 hours
Control Options	Wireless Easy control remote, Group / Multi Zone wireless remote, Bluetooth (Smartphone / APP)
Warranty	5 years limited warranty for power supply, 15 years limited warranty for LED source

CONTROL (TABLE 1)



***** Remote holder sold separatel

WL-MZ (RF remote control)

Dimensions	W 2" x D 0.825" x H 4.725"
Weight	0.1lbs
Signal Type	RF (Radio Frequency) 2.4GHz
Range	98ft from fixture open air
Zone / Mode	4 zones / 9 modes
Working Temp.	-4ºF to 131ºF (-20ºC to 55ºC)
* Battery	2 x AAA battery

***** Not include



WL-HLD-WH



WL-HLD-BK

BLT (Bluetooth / Smartphone App)

Bluetooth	
Software	IOS 8.0 and up, Android 4.4 and up
App	Smart Life or Tuya Smart supported
Features	Group, Scences
Bluetooth Distance	> 49ft in open area
Additional Feature	Home Management / Third party control -> Alexa, Google Assistant (by others)

Smart Life

Tuya Smart

UTOPIA LIGHTING reserves the right to change specifications, drawings, dimensions without prior notice. Visit our website for the latest product information.

CUBE2-Y

4DMX (TABLE2)

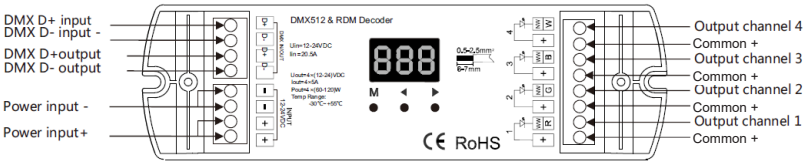

4DMX (4-channel DMX decoder)

Dimensions	L 6.7" x W 2" x D 0.9"
Output Current	5A / channels
Input Voltage	12-24V DC
Output Power	4 x (60-120)W
Frequency	PWM output



DMXT14

Zone	4 zone
Signal	DMX512 protocol
Dimensions	L 3.4" x H 3.4" x D 1.45"
Features	10 built-in mode, scene
Operating Temp.	-22ºF ~ 131ºF (-30ºC ~ 55ºC)



DMXT8

Zone	4 zone
Signal	DMX512 protocol
Dimensions	L 7" x H 1.3" x D 1.9"
Features	12 built-in mode, scene
Operating Temp.	-22ºF ~ 131ºF (-30ºC ~ 55ºC)

UTOPIA LIGHTING reserves the right to change specifications, drawings, dimensions without prior notice. Visit our website for the latest product information.

CUBE2-Y CUSTOM DESIGN PATTERNS

Instruction:

- Please provide sketches illustrating overall dimensions including corner dimensions, and powerfeed location(s) required.
- Use Linear(2/3/4/5/6/8FT), and coner connectors (HC90, TC, and XC) in center dimension.



UTOPIA LIGHTING reserves the right to change specifications, drawings, dimensions without prior notice. Visit our website for the latest product information.