Revised: 11.16.26

MWP1-3G

Project Name:	
Type:	



APPLICATION

Cast in a traditional design, the LED wall mount luminaire offers the shape you've grown accustomed to coupled with the high-powered and energyefficient LEDs you want. Photocell for dusk to dawn operation. It is ideal for safety , security and any facilities.

FEATURES:

- Rugged die-cast aluminum housing.
- Excellent thermal management ensures long lifespan.
- High impact, weather resistant housing and lens.
- Standard photocell for dusk to dawn operation which is ideal for safety, security and facilities.
- Standard integrated Emergency Battery Backup for standby lighting in the event of power loss.
- Polycarbonate clear lens.

MOUNTING:

- Surface wall mount.
- Two-step easy installation.

LED:

- Field Adjustable color temperature: 3000 / 4000 / 5000K
- Scalable lumen packages from 1,300 - 2,660 lm.
- Estimated 50,000-hour LED lifespan based on IES LM-80 results and TM-21 calculations.
- Lumen Maintenance L70 greater than 54,000 hours IESNA TM-21.
- CRI 80

ELECTRICAL:

- Power factor >90%, THD <20%, and an expected life of 50,000 hours.
- Universal 120-277 VAC input voltage.
- Lithium integrated Emergency Battery Backup.
- Operating temperature: -20ºC to 40ºC (-4ºF to 104ºF)

LISTING:

- Listed to UL 1598 and UL 8750.
- UL / cUL wet location listed.
- 5 years warranty.
- ARRA compliant. (optional)

CONFIGURATIONS

Series	LED	LENS	Lumen Output (3000K)	Lumen Efficiency	Lumen Output (4000K)	Lumen Efficiency	Lumen Output (5000K)	Lumen Efficiency	Weight
MWP1-3G	10W	Clear Lens	1300 lm	130 lm/W	1400 lm	140 lm/W	1350 lm	135 lm/W	1.8lb / 0.83 kg
	20W	Clear Lens	2550 lm	128 lm/W	2660 lm	133 lm/W	2600 lm	130 lm/W	2.02lb / 0.92 kg

ORDERING INFORMATION

EXAMPLE: *MWP1-3G-10LED-3T-UNV-BK*

MODEL	LED		COLOR TEMP.		VOLTAGE		FINISH		DIFFUSER	
MWP1-3G	**10LED**	10W LED	**-3T**	3000/4000/5000K Selectable	**UNV**	120-277V (Std.)	**BZ**	Dark Bronze (Std.)	**(Blank)**	Clear Diffuser
	20LED	20W LED					**BK**	Black		

PHOTOCELL		OPTIONS	
(Blank)	120-277V Photocell Installed [1]	**(Blank)**	4W (700lm) Integrated Emergency Battery Backup [2]
		ARRA	Assembled in USA
		CASAMBI	Contact factory for CASAMBI READY options

NOTES:
1. Enable or disable with on/off switch.
2. Run time:
   64ºF(18ºC) to 104ºF(40ºC) : 190min
   32ºF(0ºC) : 160min
   -4ºF(-20ºC) : 100min

UTOPIA LIGHTING reserves the right to change specifications, drawings, dimensions without prior notice.

MWP1-3G



Clear Lens

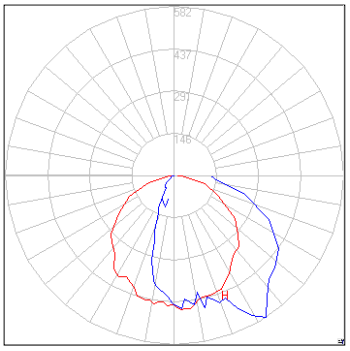

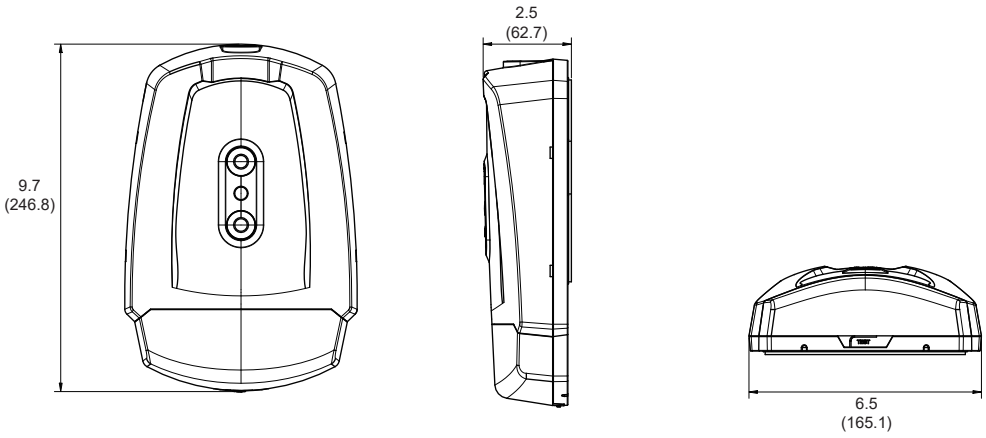

All dimensions are in inches (millimeters).

UTOPIA LIGHTING reserves the right to change specifications, drawings, dimensions without prior notice.

MWP1-3G





Two-step easy installation
fix the base on the wall and snap-in.

SPACING GUIDELINES

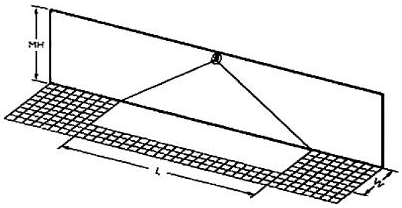

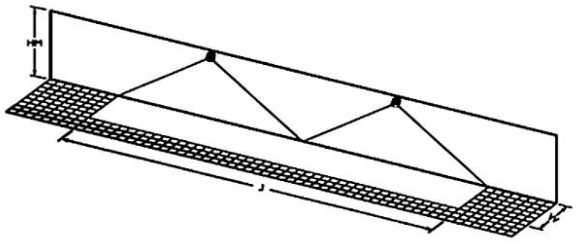

Single Unit

Mounting Height	Path of Egress Length Width	Length	Average Foodcandle
8’	21’	31’	1.44
10’	22’	33’	1.23
12’	24’	35’	1.03

Two Units center-to-center spacing

Mounting Height	Path of Egress Length Width	Length	Average Foodcandle
8’	21’	31’	1.44
10’	22’	33’	1.23
12’	24’	35’	1.03

UTOPIA LIGHTING reserves the right to change specifications, drawings, dimensions without prior notice.